M322C

Wheel Excavator

Engine		
Engine Model	Cat® 3056E ATAAC	
Net Power	122 kW	164 hp
Weights		
Operating Weight	20 500 kg (45,195 lb) to 22 700 kg (50,045 lb)	
Transmission		
Maximum Travel Speed	25 km/h	15.5 mph

M322C Wheel Excavator

The C Series incorporates innovations for improved performance and versatility.

Engine

✓ The new Cat 3056E DIT ATAAC electronically controlled engine provides increased horsepower. Performance, reliability, durability, excellent fuel economy, and low sound levels help maximize working efficiency. The engine is U.S. EPA Tier 2 emission certified. **pg. 4**

Hydraulics

✓ The hydraulic system, featuring a separate swing pump and load-sensing system, provides maximum power and exceptional controllability. The new adjustable hydraulic sensitivity allows adjustment of attachments to find the best setup for any application. **pg. 5**

Operator Station

✓ The new operator station design maximizes operator comfort and visibility. Standard features such as ergonomic joysticks, soft switch panel and new monitor are some of the features that help allow the operator to work comfortably and efficiently throughout the work day. **pg. 6**

Buckets and Work Tools

Buckets, grapples, hammers, and quick couplers provide a total solution package to the end-user. Built for performance and durability these tools deliver high productivity, long service life and excellent value. **pg. 11**

Serviceability

✓ All daily maintenance points are accessible from ground level. A centralized greasing system allows lubrication of critical points. **pg. 12**

Increased lifting capacity, improved cycle times and ease of operation lead to increased productivity and lower operating costs.

Ease of Operation

✓ The new Joystick Steering allows the operator both to work with implements and maneuver the machine without using the steering wheel. This provides significant improvement in operator comfort and productivity. **pg. 8**

Undercarriage

Pin-On design of outriggers and dozer blade allows for interchangeability. Heavy-duty cylinder protection and box section design provide excellent durability. **pg. 9**

Booms and Sticks

✓ The box section design of all front end structures provides the strength needed for even the toughest applications. Multiple boom and stick options allow you to pick the best match for your job. **pg. 10**

Environmentally Responsible Design

✓ Helping to protect our environment, the engine has low operator and spectator sound levels, longer filter change intervals and is more fuel efficient. **pg. 14**

Complete Customer Support

Your Cat dealer offers a wide range of services that can be set up under a customer support agreement when you purchase your equipment. The dealer will help you choose a plan that can cover everything from machine and attachment selection to replacement. **pg. 15**

✓ *New Feature*

Engine

Built for power, reliability, low maintenance, excellent fuel economy and low emissions.

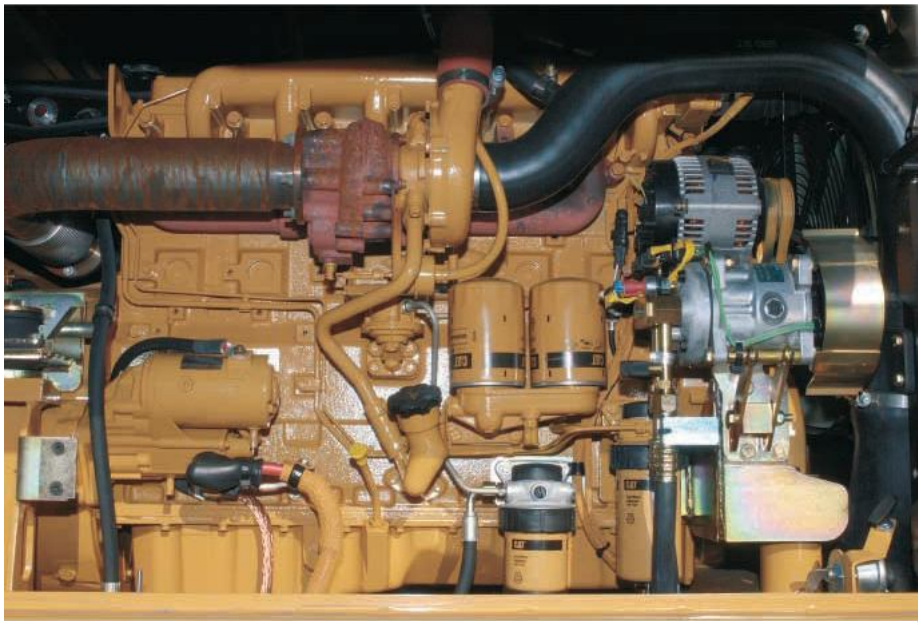

Powerful Performance. The 3056E DIT ATAAC engine delivers a net power of 122 kW (164 hp) at the rated speed of 2000 rpm, and meets U.S. EPA Tier 2 emission standards.

Turbocharged and Air-to-Air Aftercooled. The turbocharger packs dense air into the cylinders for more complete combustion, lower emissions with improved engine performance and efficiency. The air-to-air aftercooler reduces smoke and emissions by providing cooler inlet air for efficient combustion.

Cooling System. Features an electronically controlled variable speed on-demand fan. Driven by a hydraulic motor, fan speed is determined by engine coolant, transmission oil, hydraulic oil and inlet manifold temperature. Cooler operating conditions allow lower average fan speeds resulting in reduced fuel consumption and lower noise levels. The electronic engine control continuously compensates for this fan load, providing consistent net horsepower, regardless of operating conditions.

Engine Oil. Caterpillar® engine oil is formulated to optimize engine life and performance and is recommended for use in Cat diesel engines. The engine oil change interval has been increased to 500 hours.

Low Sound, Low Vibration. The 3056E design improves operator comfort by reducing sound and vibration.

- Operator sound level, LPA, 72 db(A)
- Spectator sound level, LWA, 102 db(A)

Fuel Injection Pump. The new injection pump is electronically controlled and helps to reduce fuel consumption.

Service. The engine is longitudinally mounted on the right side to provide easy access from ground level to the oil filter, oil filler, oil drain valve, fuel filter, V-belt tightener, and oil dipstick.

Hydraulics

Fast cycle times, increased lift capacity and high bucket and stick forces combine to maximize your productivity in any job.

Hydraulic Pumps. The closed center hydraulic system provides peak flow and pressure at any engine speed, for optimum digging force with precise implement controllability. In addition to the main hydraulic pump, a dedicated hydraulic pumps for swing, cooling fan motor and pilot systems ensure best in class performance.

Proportional Auxiliary Hydraulics. Versatility of the hydraulic system can be expanded to utilize a wide variety of hydraulic work tools using multiple valve options.

High Pressure Auxiliary Circuit

- The Multi-function Valve is the core of the Tool Control System. This system allows an operator to select up to five pre-programmed work tools from the monitor. These preset hydraulic parameters support either one-way flow or two-way flow.
- The dedicated Hammer Function Valve is the best option for machines that will only require single direction flow and do not require the flexibility provided by the Multi-function Valve.

Medium Pressure Function Valve

- The Medium Pressure Function Valve provides proportional flow that is ideal for tilting buckets or rotating tools.

Stick Regeneration Circuit. The stick regeneration circuit increases efficiency and controllability for higher productivity and lower operating costs.

Hydraulic Cylinder Snubbers. The hydraulic cylinder snubbers at rod end of boom cylinders, both ends of stick cylinders and bucket cylinder rod end cushion shocks, reduce sound and increase cylinder life.

Caterpillar XT-6™ ES Hoses. To meet the critical flexibility and strength demands of wheel excavator applications, XT-6 ES hoses are installed in the high pressure hydraulic system.

Caterpillar Hydraulic Oil. Maximum protection in all hydraulic systems against mechanical wear and corrosion. Its high zinc content reduces wear, and extends pump life. Provided certain requirements are met (e.g. S•O•S℠ analysis every 500 hours), the hydraulic oil change interval is extended from 2,000 hours to 4,000 hours.

Operator Station

The interior layout maximizes operator space, provides exceptional comfort and reduces operator fatigue.

Interior Operator Station. The operator station is quiet with conveniently placed controls, low lever and pedal effort, ergonomic seat design and highly effective ventilation.

Seat. A new seat with a two-tone color design offers adjustable back rest, lumbar support, seat cushion length and angle. The optional comfort seat with air suspension and seat heating automatically adjusts to the operator's weight.

Consoles. Designed for simplicity and functionality. The left side console is tiltable for excellent access to the cab. Dozer blade and/or outrigger controls as well as the radio-off switch are located on the left console.

Automatic Climate Control. Fully automatic climate control adjusts temperature and air flow.

Control Convenience. Each control is placed within easy reach of the operator. Joysticks control the implement functions, steer the machine while in first gear and activate the adjustable hydraulic sensitivity. The soft switch panel controls the oscillating axle, power control settings, parking brake, automatic engine speed control, and other hydraulic functions.

Foot Pedals. Two-way pedals for travel and auxiliary circuits give more floor space and reduce the need to change positions. The foot pedal for auxiliary high-pressure circuit can now be locked in the off position and is used as a footrest for greater operator comfort.

Cab Mounts. The cab shell is attached to the frame with viscous mounts, reducing vibration and sound.

Viewing Area. There is excellent viewing area through wide windows surrounding the operator. The lower of the two-piece window can be opened separately for better air ventilation or be slid into the upper window to completely open the front bay. Both front window options are equipped with a multi-position sunscreen. An optional one-piece window is available.

Skylight. A unique large polycarbonate skylight provides excellent upward visibility.

Wipers. The parallel wiper system is designed to maximize visibility.

Large Storage Compartment. A large storage space behind the seat with optional cover, provides sufficient room for a lunch box.

Easy Access. Conveniently located grab irons and large steps mounted to the undercarriage, together with a tiltable steering column and tiltable left side console, provide easy access to the cab.

Ease of Operation

Designed for simple, easy operation, the M322C allows the operator to focus on production.

Monitor. The new, compact monitor enhances viewing while displaying a variety of language-based information that is easy to read and understand.

– Pre-start system alerts the operator to low coolant and hydraulic oil levels prior to starting.

– Filter and oil change warnings are displayed when the number of hours reaches the maintenance interval.

– Tool select function allows the operator to select a pre-defined hydraulic work tool.

– Adjustable braking characteristics enables an operator to select three levels of travel motor retarder aggressiveness when releasing the travel pedal.

– 23 different languages are available on the M322C.

Joystick Steering. Enables an operator to reposition the machine in the first gear while simultaneously working with the implements, keeping both hands on the joysticks. The operator is more productive using this feature.

Power Control Settings. Three modes allow the operator to choose the optimum engine and hydraulic power setting.

- Economy mode provides the best fuel efficiency allowing lower owning and operating costs.
- Power mode is used for normal machine operation providing peak performance under any operating condition.
- Travel mode automatically engages when the travel pedal is depressed. This mode provides maximum speed and drawbar pull when repositioning or moving the machine to a new work location.

Adjustable Hydraulic Sensitivity. This hydraulic modulation control allows an operator to adjust the sensitivity of the machine according to the job requirements. Four levels of sensitivity can be selected on the soft touch panel to the right of the operator. Lower settings provide finite control, without sacrificing full hydraulic power. This feature can be quickly activated/de-activated using a trigger on the right joystick.

Undercarriage

Undercarriage and axle design provides maximum strength, flexibility and mobility on wheels.

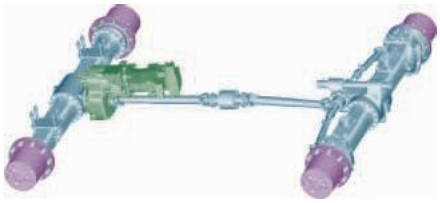

New Drive Line Concept. The new travel motor and transmission control in the drive line provide comfortable travel due to increased smoothness, improved hydraulic retarding and improved gear shifting.

Travel Motor. The advanced travel motor gives higher hydraulic retarding forces especially in downhill roading by continuously using the optimal displacement of the travel motor for retarding. Braking characteristics can be adjusted to the operator's preferred level of retarding in three steps.

Transmission Control. Provides more useable speed for faster uphill travel and downhill retarding.

Heavy Duty Axles. The front axle offers wide oscillating and steering angles. The transmission is mounted directly on the rear axle for protection and optimum ground clearance.

Advanced Disc Brake System. The new disc brake system works directly on the hub instead of the drive shaft to avoid planetary gear backlash. This eliminates the rocking effect associated with working free on wheels. The new axle is designed for low maintenance and the oil change intervals have been increased from 1,000 to 2,000 hours further reducing owning and operating costs.

Undercarriage Design. A rigid, welded frame provides excellent durability. Efficient hydraulic lines routing, transmission protection and heavy duty axles make the undercarriage perfect for wheel excavator applications. Both outriggers and dozer blade are pin-on for maximum flexibility. An optional work tool restraint bar is available.

Outriggers. The pin-on design allows the outriggers to be mounted on the front and/or rear for maximum operating stability when digging or lifting and are individually controlled for leveling on slopes.

Dozer Blade. The pin-on design allows the dozer blade to be mounted on the front and/or rear and is used for leveling, clean-up work and for stabilizing the machine during digging applications. The large dozer bottom and parallel design provide minimized ground pressure.

Tool Box. A large sealed and lockable tool box is mounted on the undercarriage between the steps on the machine's left side. A second optional tool box is available for the right side.

Booms and Sticks

Designed for maximum flexibility to keep production high on all jobs.

One-Piece Boom. The one-piece boom (5.65 m/18 ft 6 in) fits best for all standard applications such as truck loading and digging. The straight section reduces stress flow and helps increase the lifetime of the boom.

Variable Adjustable (VA) Boom. The variable adjustable boom (5.44 m/17 ft 10 in) offers improved right side visibility and machine roading balance. When working in tight quarters or lifting heavy loads, the VA boom offers the best flexibility. Hammer use is permitted.

Sticks. Three different stick lengths are offered to match different application requirements:

- Short stick (2.2 m/7 ft 3 in) for maximum breakout force and lifting capability.
- Medium stick (2.5 m/8 ft 2 in) for greater crowd force and lift capacity.
- Long stick (2.9 m/9 ft 6 in) for greater depth and reach requirements.

Design. Booms and sticks are welded, box section structures with thick, multi-plate fabrications in high stress areas and are built for performance and long service life.

Flexibility. The choice of two booms and three sticks provides the right combination of reach and digging forces for all applications.

Buckets and Work Tools

A wide variety of buckets and work tools help optimize machine performance.

Buckets. Caterpillar offers four excavating buckets and four ditch cleaning buckets.

Tip Selection. The following tips are available for the M318C:

- Long tips
- Short tips
- Abrasive tips
- Penetration tips
- Sharp corner tips
- Wide tips

Available Couplers. There are several hydraulic couplers available for the M322C.

- Quick Couplers enable the operator to simply release one work tool and pick up another. This makes the excavator highly versatile to suit the business and application needs.
- Pin Grabber Plus Quick Couplers multiply the versatility and utility by allowing them to pick up and use virtually any work tool equipped with standard pins. Both manual and hydraulic actuated versions are available. The hydraulic circuit is available as a retrofit kit dedicated to this coupler. Buckets can be reversed for greater flexibility when working around and under obstructions.
- The dedicated Pin-Lock is a hook and pin type interface which features a locking mechanism to ensure a secure fit. Buckets and tools with the matching interface can be changed in about one minute and require one pin (manually inserted into the coupler) to couple tools into place. The Pin-Lock dedicated coupler pins onto the stick, allowing the machine to pick up new and old style competitive work tools that have Pin-Lock style pockets. These tools include buckets, hammers, rippers and augers.
- Tilt-Lock couplers have the same functionality as the Pin-Lock coupler, but with the added benefit of the tilting function. This functionality precisely positions a work tool based on the work demands. This is key for backfilling, ditch cleaning, grading and sloping operations.
- Dedicated Wedge-Lock couplers are considered the standard when talking about dedicated couplers on hydraulic excavators. This coupler design provides excellent durability in the most demanding applications. A range of buckets, hammer/compactor brackets, grapples and other tools are available for this coupler style.

Tool Control. The integrated Tool Control system allows for five pre-set combinations, eliminating the need to re-set the hydraulic parameters each time a tool is changed. Specific flow and pressure can be programmed easily as well as one-way/two-way hydraulic functions. Each of the five programmed tools can even be given a specific name via the monitor.

Work Tools. A variety of work tools are available from Caterpillar, including buckets, quick couplers, grapples, hammers and many others to meet your application requirements.

Multi-Processor. The Caterpillar Multi-Processors can be equipped with different jaw types depending on your need.

- CC-jaws combi cutter
- CR-jaws concrete cutter
- PP-jaws primary pulverizer
- PS-jaws secondary pulverizer
- S-jaws steel

Multi-Grapple. The Multi-Grapple with unlimited left and right rotation is the ideal tool for stripping, sorting, handling and loading.

Orange Peel Grapple. Specifically designed for handling scrap and rock in recycling and transfer applications.

Clamshell. For applications requiring vertical excavation capability or in material transfer needs, a clamshell provides an ideal solution. The free-swinging tool increases the working envelop of your excavator.

Hammer. With their wide variety of tools, Cat hammers provide the perfect match for maximum life, efficiency and productivity.

Serviceability

Extended service intervals and easy access reduce operating costs.

Easy Access. Gull-wing doors, with pneumatically-assisted lift cylinders, effortlessly lift up for exceptional access to the engine and all service points. An additional toolbox located under the step leading to the upper platform offers clean, dry storage for the operator.

Ground Level Service. The fuel/water separator, engine oil filter, battery, radiator fluid level, fuel filter, engine oil gauge, hydraulic oil level and air cleaner are all easily accessible at ground level allowing critical maintenance to be performed quickly and efficiently.

Easy to Clean Coolers. Flat fins on all coolers reduce clogging and make it easier to remove debris.

Swing-Up AC Condenser. Without using tools, the AC condenser swings up vertically to allow cleaning on both sides as well as clear access to the oil cooler.

Front Compartment. The right front service compartment tilts providing ground level access to the batteries, ATAAC, AC condenser and the air filter.

Air Filter. Caterpillar Radial Seal air filters eliminate the use of service tools, reducing maintenance time. The air filter features a double-element construction and built-in precleaner for superior cleaning efficiency. When the air cleaner plugs, a warning is displayed on the monitor screen inside the cab.

Capsule Filter. The hydraulic return filter, a capsule filter, is situated inside the hydraulic tank. This filter prevents contaminants from entering the system when the hydraulic oil is changed.

Engine Inspection. The engine can be accessed from both ground level and the upper structure. The longitudinal layout ensures that all daily inspection items can be accessed from ground level. The engine and pump compartment are separated by a steel wall.

Remote Greasing Block. A greasing block located in the engine compartment with two grease points for the swing bearing and one for the front end attachment delivers grease to hard to reach locations. For the lower undercarriage, two remote blocks give easy access for greasing to the oscillating axle and, as an option, the dozer blade.

Water Separator. The water separator removes water from fuel even when under pressure. For ease of service, the water separator is in the engine compartment.

Fuel Tank Drain. Located at the bottom of the upper frame, the fuel tank drain with hose connection allows simple, spill free fluid draining.

Hydraulic Tank Drain. Located in the engine compartment, the hydraulic tank drain with hose connection enables simple, spill free fluid changes.

Handrails and Steps. Large handrails and steps assist the operator in climbing on and off the machine.

Anti-Skid "Punched-Star" Plate. Anti-skid punched-star plate covers the top of the steps and upper structure to help prevent slipping during maintenance.

Extended Service Intervals. M322C service and maintenance intervals have been extended to reduce machine service time, increase machine availability and reduce operating costs. Using Scheduled Oil Sampling analysis (S•O•S^{SM}), hydraulic oil change intervals can be extended from 2,000 hours to 4,000 hours. Engine coolant change intervals are 12,000 hours with Cat Extended Life Coolant/Anti-freeze.

Scheduled Oil Sampling. Caterpillar has specially developed (S•O•S^{SM}) Oil Sampling Analysis to help ensure better performance, longer life and increased customer satisfaction. It is a thorough and reliable early warning system which detects traces of metals, dirt and other contaminants in your engine, axle and hydraulic oil. It can predict potential trouble early avoiding costly failures. Your Caterpillar dealer can give you results and specific recommendations shortly after receiving your sample.

Electronic Technician. The electronic engine and machine controllers provide detailed diagnostic capability for service technicians. The ability to store active and intermittent indicators simplifies problem diagnosis and reduces total repair time, resulting in improved machine availability and lower operating cost.

Caterpillar Product Link System. The Product Link system includes a transceiver module (on-board the machine), office application PC software and a satellite communications network to track machine hours, location and warnings. Product Link simplifies maintenance scheduling, fleet management and product problem event tracking and diagnosis. (PL-321)

Environmentally Responsible Design

The M322C helps build a better world and preserve the fragile environment.

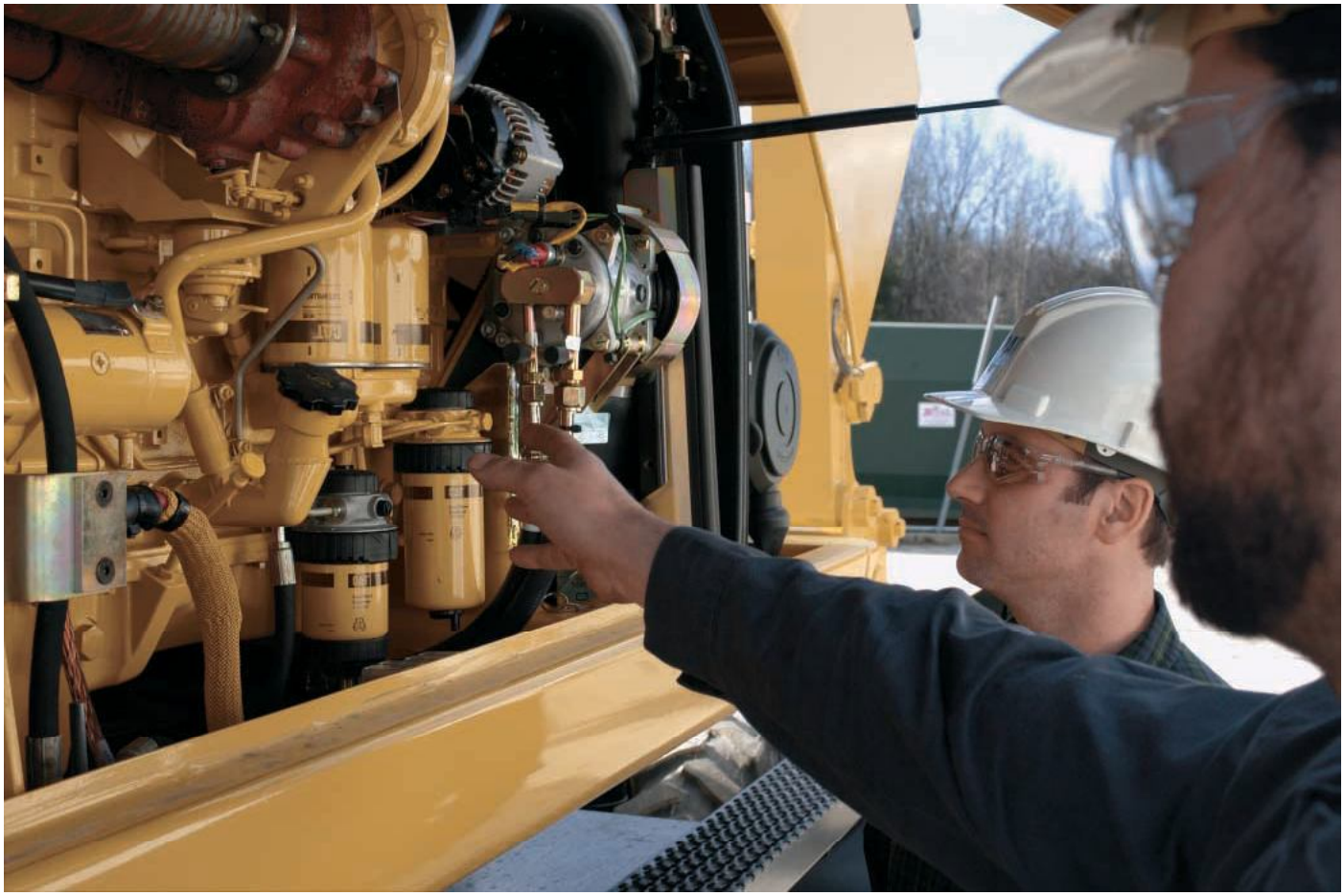

More Performance. The M322C is designed to provide more performance yet uses less fuel than ever before. This means more work done in a day, less fuel consumed and minimal impact on the environment.

Low Exhaust Emissions. The Cat 3056E used in the M322C is a low emission engine designed to meet US EPA non-road Tier 2 emission regulations.

Quiet Operation. The noise level inside the cab and as well the outside spectator sound are extremely low.

Automatic Engine Control. Automatic Engine Control (AEC) reduces engine rpm if no operation is performed, maximizing fuel efficiency and reducing sound levels.

Ozone Protection. To help protect the earth's ozone layer, the air conditioning unit uses only R-134a refrigerant which does not contain harmful chlorofluorocarbons (CFC's).

Biodegradable Hydraulic Oil. The biodegradable hydraulic oil (HEES™) is formulated to provide excellent high-pressure and high-temperature characteristics and is fully compatible with the all hydraulic components. HEES is fully decomposed by soil or water microorganisms, providing a more environmentally-sound alternative to mineral-based oils. This is available as an option.

Fewer Leaks and Spills. Lubricant fillers and drains are designed to minimize spills.

Longer Service Intervals. Working close with your Caterpillar Dealer can help extend service intervals for engine oil, hydraulic oil, axle oil, and coolant meaning less required fluids. This means less disposal, all adding up to lower operating costs.

Complete Customer Support

Cat dealer services help you operate longer with lower costs.

Product Support. You will find nearly all parts at our dealer parts counter. Cat dealers utilize a worldwide computer network to find in-stock parts to minimize machine downtime. You can save money with Cat remanufactured components.

Machine Selection. Make detailed comparisons of the machines you are considering before you buy. What are job requirements, machine attachments and operating hours? What production is needed? Your Cat dealer can provide recommendations.

Purchase. Look past the initial price. Consider the financing options available as well as day-to-day operating costs. This is also the time to look at dealer services that can be included in the cost of the machine to yield lower equipment owning and operating costs over the long run.

Customer Support Agreements. Cat dealers offer a wide variety of product support agreements, and work with customers to develop a plan that best meets specific needs. These plans can cover the entire machine, including attachments, to help protect the customer's investment.

Operation. Improving operating techniques can boost your profits. Your Cat dealer has videotapes, literature and other ideas to help you increase productivity, and Caterpillar offers certified operator training classes to help maximize the return on your machine investment.

Maintenance Services. Repair option programs guarantee the cost of repairs up front. Diagnostic programs such as S•O•S℠ analysis and Coolant Sampling and Technical Analysis help avoid unscheduled repairs.

Replacement. Repair, rebuild or replace? Your Cat dealer can help you evaluate the cost involved so you can make the right choice.

Engine

Engine Model	Cat 3056E ATAAC	
Gross Power	127 kW	170 hp
Net Power	122 kW	164 hp
ISO 9249	122 kW	164 hp
EEC 80/1269	122 kW	164 hp
Bore	100 mm	3.94 in
Stroke	127 mm	5 in
Displacement	6 L	366 in^3
Cylinders	6	
Maximum Torque at 1,400 rpm	695 N•m	513 lb ft

- Ratings at 2,000 rpm.
- The 3056E ATAAC engine meets U.S. EPA non-road Tier 2 emission requirements.
- Net power advertised is the power available at the flywheel when the engine is equipped with fan, air cleaner, muffler and alternator.
- No engine derating required below 3000 m (9,840 ft).

Weights

Operating Weight	20 500 kg (45,195 lb) to 22 700 kg (50,045 lb)	
VA Boom		
Rear dozer only	21 000 kg	46,297 lb
Rear dozer, front outriggers	22 300 kg	49,163 lb
Front and rear outriggers	22 700 kg	50,044 lb
One-Piece Boom		
Rear dozer only	20 500 kg	45,195 lb
Rear dozer, front outriggers	21 800 kg	48,061 lb
Front and rear outriggers	22 200 kg	48,943 lb
Dozer Blade	900 kg	1,984 lb
Outriggers	1300 kg	2,866 lb
Counterweight	3900 kg	8,598 lb
2.21 m (7'3") Stick	580 kg	1,279 lb
2.48 m (8'2") Stick	600 kg	1,323 lb
2.78 m (9'2") Stick	670 kg	1,477 lb

Swing Mechanism

Swing Speed	10.5 rpm	
Swing Torque	56.3 kN•m	41,525 lb ft
Maximum Flow	112 L/min	30 gal/min
Pressure	31 000 kPa	4,496 psi

Cab

Cab/FOGS option	ISO 10262

Hydraulic System

Tank Capacity	225 L	59 gal
System Capacity	350 L	92 gal
Maximum Pressure		
Implements	35 000 kPa	5,076 psi
Travel	35 000 kPa	5,076 psi
Maximum Flow	340 L/min	90 gal/min
Auxiliary System – Medium Pressure Max	3100 kPa	450 psi
Auxiliary System – Medium Pressure Max Flow	49 L/min	13 gal/min
Auxiliary System – High Pressure Max	32 998 kPa	4,786 psi
Auxiliary System – High Pressure Max Flow	340 L/min	90 gal/min

Transmission

Maximum Travel Speed	25 km/h	15.5 mph
1st Gear, Forward/Reverse	8 km/h	5 mph
2nd Gear, Forward/Reverse	25 km/h	15.5 mph
Creeper Speed (1st Gear)	4 km/h	2.5 mph
Creeper Speed (2nd Gear)	11 km/h	6.8 mph
Drawbar Pull	112 kN	25,179 lb
Maximum Gradeability	62 %	

Service Refill Capacities

Fuel Tank Capacity	385 L	102 gal
Cooling	39 L	10 gal
Engine Crankcase	16 L	4.2 gal
Rear Axle Housing (Differential)	14.5 L	3.8 gal
Front Steering Axle (Differential)	11 L	2.9 gal
Final Drive	2.5 L	0.7 gal
Powershift Transmission	2.5 L	0.7 gal

Tires

Standard	11.00-20 dual pneumatic
Optional	See Optional Equipment

Dimensions

All dimensions are approximate.

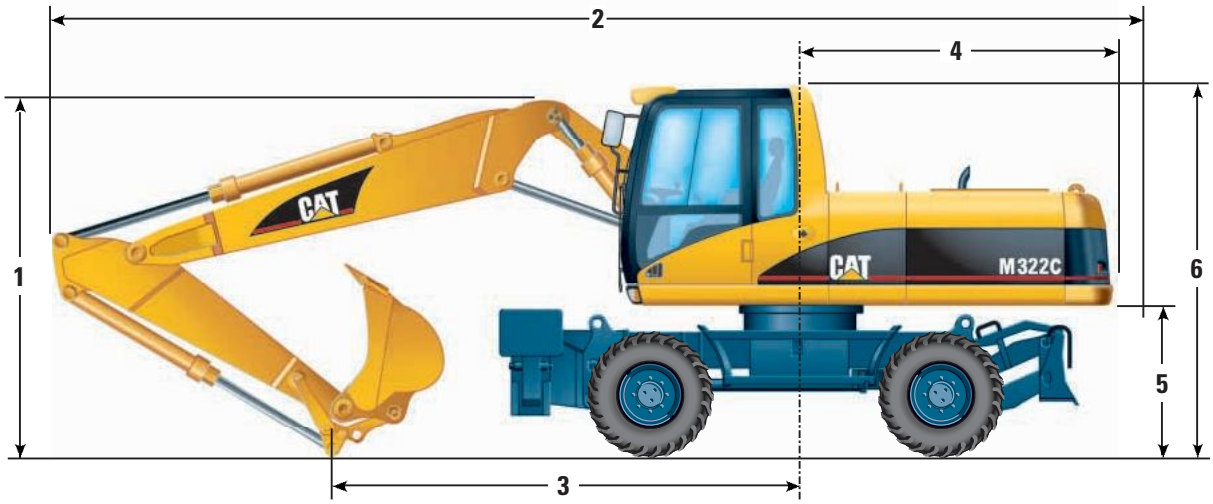

		VA boom		One-piece boom	
		mm	ft/in	mm	ft/in
1	Shipping height				
	2.5 m/8'2" stick	3230	10'7"	3250	10'8"
	2.9 m/9'6" stick	3250	10'8"	3290	10'10"
2	Shipping length				
	2.5 m/8'2" stick	9440	31'	9640	31'8"
	2.9 m/9'6" stick	9430	30'11"	9650	31'8"
3	Support point				
	2.5 m/8'2" stick	3660	12'	3720	12'2"
	2.9 m/9'6" stick	3420	11'3"	3440	11'3"
4	Tail swing radius	2750	9'	2750	9'
5	Counterweight clearance	1307	4'3"	1307	4'3"
6	Cab height	3200	10'6"	3200	10'6"

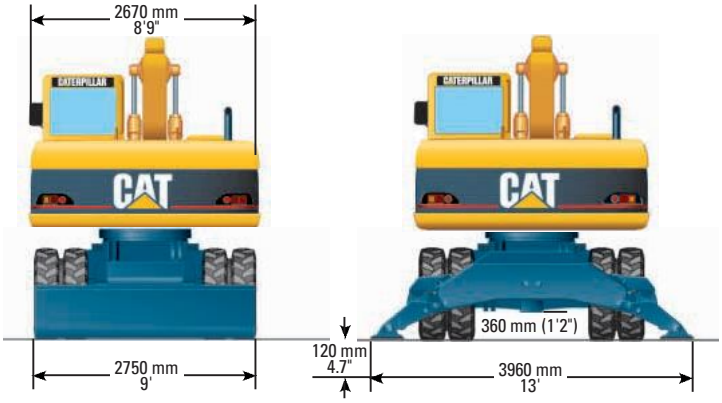

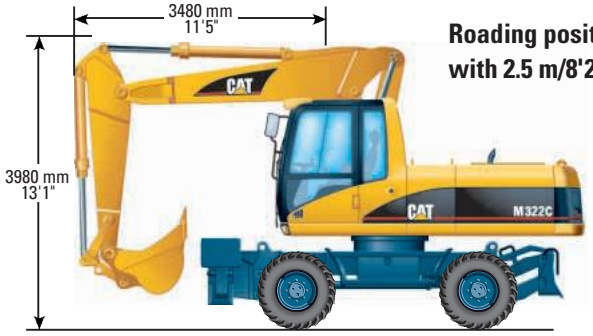

Roading position with 2.5 m/8'2" stick

Undercarriage with dozer only

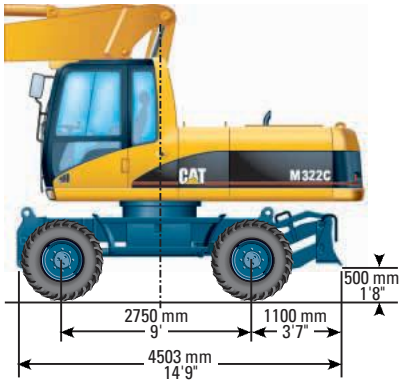

Undercarriage with 2 sets of outriggers

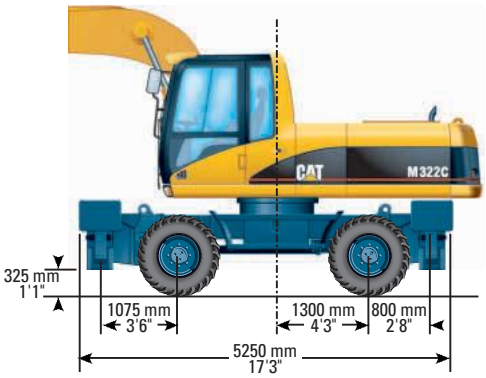

Undercarriage with 1 set of outriggers and dozer

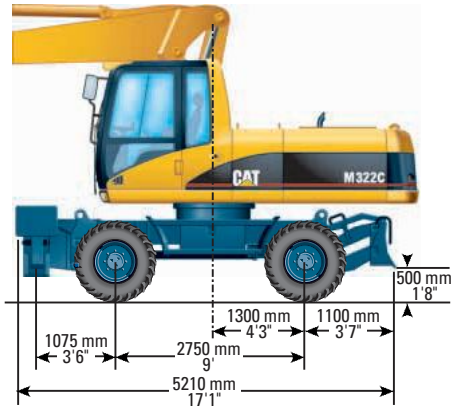

VA Boom Working Ranges

5.44 m (17'10") Variable adjustable boom, 1511 mm (59") tip radius bucket

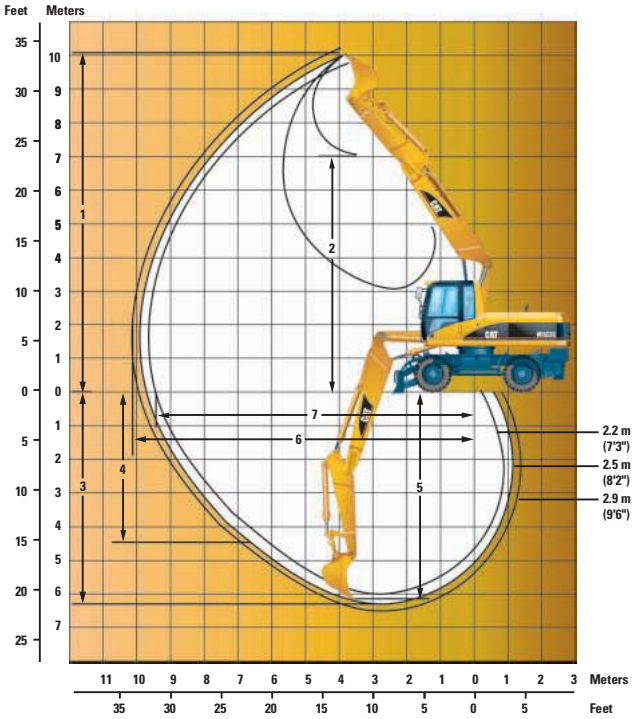

Stick Length	2.2 m (7'3")	2.5 m (8'2")	2.9 m (9'6")
1 Maximum Digging Height	10 380 mm (34'1")	10 410 mm (34'2")	10 710 mm (35'2")
2 Maximum Dump Height	6970 mm (22'10")	7000 mm (23'0")	7300 mm (23'11")
3 Maximum Digging Depth	5980 mm (19'7")	6280 mm (20'7")	6680 mm (21'11")
4 Maximum Vertical Wall Digging Depth	4430 mm (14'6")	4470 mm (14'8")	4830 mm (15'10")
5 Maximum Depth 2.5 m (8'2") Straight Clean-up	5775 mm (18'11")	6090 mm (20'0")	6507 mm (21'4")
6 Maximum Reach	9710 mm (31'10")	9940 mm (32'7")	10 330 mm (33'11")
7 Maximum Reach at Ground Level	9530 mm (31'3")	9760 mm (32'0")	10 160 mm (33'4")
Bucket Forces (ISO 6015)	131 kN (29,450 lb)	131 kN (29,450 lb)	131 kN (29,450 lb)
Stick Forces (ISO 6015)	115 kN (25,853 lb)	106 kN (23,830 lb)	97 kN (21,810 lb)

One-piece Boom Working Ranges

5.65 m (18'6") One-piece boom, 1511 mm (59") tip radius bucket

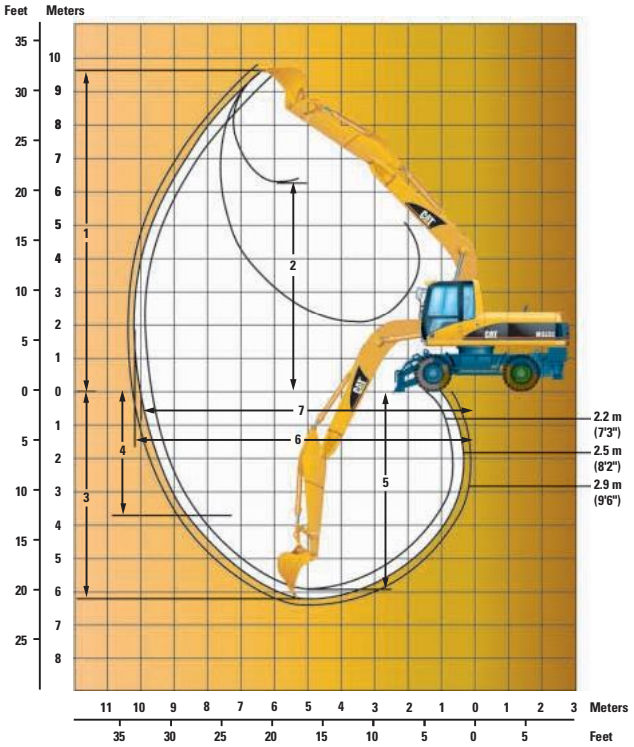

Stick Length	2.2 m (7'3")	2.5 m (8'2")	2.9 m (9'6")
1 Maximum Digging Height	9670 mm (31'9")	9540 mm (31'4")	9760 mm (32'0")
2 Maximum Dump Height	6300 mm (20'8")	6230 mm (20'5")	6450 mm (21'2")
3 Maximum Digging Depth	5770 mm (18'11")	6070 mm (19'11")	6470 mm (21'3")
4 Maximum Vertical Wall Digging Depth	4480 mm (14'8")	4780 mm (15'8")	5160 mm (16'11")
5 Maximum Depth 2.5 m (8'2") Straight Clean-up	5565 mm (18'3")	5580 mm (18'4")	6297 mm (20'8")
6 Maximum Reach	9890 mm (32'5")	10 100 mm (33'2")	10 490 mm (34'5")
7 Maximum Reach at Ground Level	9720 mm (31'11")	9930 mm (32'7")	10 320 mm (33'10")
Bucket Forces (ISO 6015)	131 kN (29,450 lb)	131 kN (29,450 lb)	131 kN (29,450 lb)
Stick Forces (ISO 6015)	115 kN (25,853 lb)	106 kN (23,830 lb)	97 kN (21,810 lb)

Work Tools Matching Guide

When choosing between various work tool models that can be installed onto the same machine configuration, consider work tool application, productivity requirements, and durability.
Refer to work tool specifications for application recommendations and productivity information.

			Variable adjustable boom 5440 mm (17'10")									One-piece boom 5050 mm (16'7")								
			Dozer lowered			2 sets of stabilizer lowered			Dozer and stabilizer lowered			Dozer lowered			2 sets of stabilizer lowered			Dozer and stabilizer lowered		
Without quick coupler		(mm) Stick length (ft/in)	2200 7'3"	2500 8'2"	2900 9'6"	2200 7'3"	2500 8'2"	2900 9'6"	2200 7'3"	2500 8'2"	2900 9'6"	2200 7'3"	2500 8'2"	2900 9'6"	2200 7'3"	2500 8'2"	2900 9'6"	2200 7'3"	2500 8'2"	2900 9'6"
Hammers	H115 s, H120C s																			
	H130 s				×			×			×			×			×			×
Multiprocessors	MP15	CC			×						×		×	×						×
		CR, S			×									×						
		PP, PS		×	×			×			×	×	×	×			×			×
	MP20		×	×	×		×	×		×	×	×	×	×		×	×		×	×
360° rotatable Shears (boom mounted)	S325		×	×	×							×	×	×						
	S340		×	×	×							×	×	×						
Multi-Grapples	G315B	D, R			×									×						
	G320B	D	×	×	×	×	×	×	×	×	×	×	×	×		×	×		×	×
Compactors	CVP110																			
Orange Peel Grapples (4 tines)	GSH15	400 L (0.5 yd³)																		
		500 L (0.67 yd³)																		
		600 L (0.75 yd³)	×	×	×							×	×	×						
		800 L (1.00 yd³)	×	×	×							×	×	×						
	GSH20	600 L (0.75 yd³)	×	×	×							×	×	×						
		800 L (1.00 yd³)	×	×	×			×			×	×	×	×			×			×
		1000 L (1.25 yd³)	×	×	×			×			×	×	×	×			×			×

• Not all work tools are available in all areas.

360° Working Range
Over the front only
Maximum Material density 1800 kg/m³ (3,000 lb/yd³)
Maximum Material density 1200 kg/m³ (2,000 lb/yd³)
× Not Compatible

Bucket Specifications

Contact your Caterpillar dealer for special bucket requirements.

Buckets without Quick Coupler

Bucket type	Width		Weight		Capacity (SAE)		No. of Teeth
	mm	in	kg	lb	m^3	yd^3	
Excavation	600	24	585	1290	0.43	0.57	3
	750	30	576	1272	0.54	0.71	3
	990	39	677	1493	0.85	1.12	4
	1200	47	757	1669	1.04	1.36	5
	1245	49	773	1706	1.12	1.47	5
	1300	51	791	1746	1.18	1.55	5
	1400	55	826	1823	1.26	1.65	6
	1400	55	826	1823	1.29	1.69	5
	1500	59	861	1900	1.40	1.84	5
Extreme Excavation	750	30	600	1323	0.58	0.77	3
	1245	49	801	1766	1.13	1.48	4
	1300	51	830	1832	1.17	1.54	5
	1400	55	868	1914	1.26	1.65	6
Ditch Cleaning, tiltable	1800	71	493	1087	0.43	0.56	
	2000	79	593	1190	0.57	0.75	
	2300	91	900	1990	0.62	0.81	
Ditch Cleaning, rigid	2000	79	670	1475	0.70	0.91	

- All bucket recommendations are subject to material density.
- All excavation buckets have 1511 mm (59") tip radius with long teeth.
- Buckets are not drilled for sidecutters.
- All excavation buckets include weld-on tooth adapters.
- Tilting ditch cleaning bucket weights include tilt mounting device.
- All buckets come with adjuster group.
- All weights are without tips.
- J300 tips required, except for 55" extreme excavation with J350 tips.

Lift Capacities with VA boom – 5.44 m (17'10")

Metric Units/all weights are in metric tons

Stick
2.2 m (7'3")

	Undercarriage configuration		3.0 m			4.5 m			6.0 m			7.5 m						
6.0 m	Rear dozer up	t							5.7		3.9							
	Rear dozer down	t								*6.0	4.4							
	Rear stab down	t								*6.0	5.3							
	2 sets stab down	t							*6.0		*6.0							
	Dozer and stab down	t							*6.0		*6.0							
4.5 m	Rear dozer up	t				*7.8		6.0	5.6		3.9	3.8		2.5				
	Rear dozer down	t					*7.8	6.8		*6.4	4.4		*5.6	2.9				
	Rear stab down	t					*7.8	*7.8		*6.4	*5.2		*5.6	3.5				
	2 sets stab down	t				*7.8		*7.8	*6.4		*6.4	*5.6		5.2				
	Dozer and stab down	t				*7.8		*7.8	*6.4		6.3	*5.6		4.3				
3.0 m	Rear dozer up	t				8.3		5.8	5.5		3.8	3.8		2.5	*2.4		1.9	8.60 m
	Rear dozer down	t					*9.5	6.5		*7.1	4.3		*5.9	2.9		*2.4	2.2	
	Rear stab down	t					*9.5	7.7		*7.1	5.1		5.7	3.5		*2.4	*2.4	
	2 sets stab down	t				*9.5		*9.5	*7.1		*7.1	*5.9		5.2	*2.4		*2.4	
	Dozer and stab down	t				*9.5		9.5	*7.1		6.1	*5.9		4.3	*2.4		*2.4	
1.5 m	Rear dozer up	t	*12.2		10.1	8.3		5.6	5.5		3.8	3.7		2.5	*2.4		1.9	8.69 m
	Rear dozer down	t		*12.2	11.8		*10.7	6.4		*7.7	4.3		*6.1	2.8		*2.4	2.1	
	Rear stab down	t		*12.2	*12.2		*10.7	7.7		*7.7	5.1		5.7	3.4		*2.4	*2.4	
	2 sets stab down	t	*12.2		*12.2	*10.7		*10.7	*7.7		7.2	*6.1		5.1	*2.4		*2.4	
	Dozer and stab down	t	*12.2		*12.2	*10.7		9.3	*7.7		6.1	*6.1		4.2	*2.4		*2.4	
Ground	Rear dozer up	t	*15.1		10.0	8.3		5.5	5.5		3.6	3.6		2.4	*2.5		1.9	8.48 m
	Rear dozer down	t		*15.1	11.7		*10.9	6.3		*7.8	4.1		*6.1	2.7		*2.5	2.2	
	Rear stab down	t		*15.1	14.8		*10.9	7.7		*7.8	5.0		5.5	3.3		*2.5	*2.5	
	2 sets stab down	t	*15.1		*15.1	*10.9		*10.9	*7.8		*7.2	*6.1		5.0	*2.5		*2.5	
	Dozer and stab down	t	*15.1		*15.1	*10.9		9.3	*7.8		6.2	*6.1		4.1	*2.5		*2.5	
-1.5 m	Rear dozer up	t	16.6		9.8	8.2		5.3	5.2		3.4	3.5		2.3	*2.8		2.1	7.94 m
	Rear dozer down	t		*17.9	11.4		*11.1	6.1		*8.0	3.9		*3.6	2.6		*2.8	2.4	
	Rear stab down	t		*17.9	14.8		*11.1	7.5		*8.0	4.8		*3.6	3.2		*2.8	*2.8	
	2 sets stab down	t	*17.9		*17.9	*11.1		*11.1	*8.0		7.1	*3.6		*3.6	*2.8		*2.8	
	Dozer and stab down	t	*17.9		*17.9	*11.1		9.5	*8.0		5.9	*3.6		*3.6	*2.8		*2.8	
-3.0 m	Rear dozer up	t	16.7		9.8	8.2		5.3	5.0		3.2							
	Rear dozer down	t		*18.5	11.5		*11.3	6.0		*6.5	3.7							
	Rear stab down	t		*18.5	14.8		*11.3	7.4		*6.5	4.6							
	2 sets stab down	t	*18.5		*18.5	*11.3		*11.3	*6.5		*6.5							
	Dozer and stab down	t	*18.5		*18.5	*11.3		9.3	*6.5		5.7							

English Units/all weights are in lbs (multiply by 1,000)

Stick
2.2 m (7'3")

	Undercarriage configuration		10.0 ft			15.0 ft			20.0 ft			25.0 ft						
20.0 ft	Rear dozer up	lb							12.5		8.5							
	Rear dozer down	lb								*13.2	9.7							
	Rear stab down	lb								*13.2	11.6							
	2 sets stab down	lb							*13.2		*13.2							
	Dozer and stab down	lb							*13.2		*13.2							
15.0 ft	Rear dozer up	lb				*17.1		13.2	12.3		8.5	8.3		5.5				
	Rear dozer down	lb					*17.1	14.9		*14.1	9.7		*12.3	6.3				
	Rear stab down	lb					*17.1	*17.1		*14.1	*11.4		*12.3	7.7				
	2 sets stab down	lb				*17.1		*17.1	*14.1		*14.1	*12.3		11.4				
	Dozer and stab down	lb				*17.1		*17.1	*14.1		13.8	*12.3		9.4				
10.0 ft	Rear dozer up	lb				18.2		12.7	12.1		8.3	8.3		5.5	*5.2		4.1	28'2"
	Rear dozer down	lb					*20.9	14.3		*15.6	9.4		*13.0	6.3		*5.2	4.8	
	Rear stab down	lb					*20.9	16.9		*15.6	11.2		12.5	7.7		*5.2	*5.2	
	2 sets stab down	lb				*20.9		*20.9	*15.6		*15.6	*13.0		11.4	*5.2		*5.2	
	Dozer and stab down	lb				*20.9		20.9	*15.6		13.4	*13.0		9.4	*5.2		*5.2	
5.0 ft	Rear dozer up	lb	*26.8		22.2	18.2		12.3	12.1		8.3	8.1		5.5	*5.2		4.1	28'6"
	Rear dozer down	lb		*26.8	26.0		*23.5	14.1		*16.9	9.4		*13.4	6.1		*5.2	4.6	
	Rear stab down	lb		*26.8	*26.8		*23.5	16.9		*16.9	11.2		12.5	7.4		*5.2	*5.2	
	2 sets stab down	lb	*26.8		*26.8	*23.5		*23.5	*16.9		15.8	*13.4		11.2	*5.2		*5.2	
	Dozer and stab down	lb	*26.8		*26.8	*23.5		20.5	*16.9		13.4	*13.4		9.2	*5.2		*5.2	
Ground	Rear dozer up	lb	*33.2		22.0	18.2		12.1	12.1		7.9	7.9		5.2	*5.5		4.1	27'10"
	Rear dozer down	lb		*33.2	25.7		*24.0	13.8		*17.1	9.0		*13.4	5.9		*5.5	4.8	
	Rear stab down	lb		*33.2	32.6		*24.0	16.9		*17.1	11.0		12.1	7.2		*5.5	*5.5	
	2 sets stab down	lb	*33.2		*33.2	*24.0		*24.0	*17.1		*15.8	*13.4		11.0	*5.5		*5.5	
	Dozer and stab down	lb	*33.2		*33.2	*24.0		20.5	*17.1		13.6	*13.4		9.0	*5.5		*5.5	
-5.0 ft	Rear dozer up	lb	*36.5		21.6	18.0		11.6	11.4		7.4	7.7		5.0	*6.1		4.6	26'0"
	Rear dozer down	lb		*39.4	25.1		*24.4	13.4		*17.6	8.5		*7.9	5.7		*6.1	5.2	
	Rear stab down	lb		*39.4	32.6		*24.4	16.5		*17.6	10.5		*7.9	7.0		*6.1	*6.1	
	2 sets stab down	lb	*39.4		*39.4	*24.4		*24.4	*17.6		15.6	*7.9		*7.9	*6.1		*6.1	
	Dozer and stab down	lb	*39.4		*39.4	*24.4		20.9	*17.6		13.0	*7.9		*7.9	*6.1		*6.1	
-10.0 ft	Rear dozer up	lb	*36.8		21.6	18.0		11.6	11.0		7.0							
	Rear dozer down	lb		*40.7	25.3		*24.9	13.2		*14.3	8.1							
	Rear stab down	lb		*40.7	32.6		*24.9	16.3		*14.3	10.1							
	2 sets stab down	lb	*40.7		*40.7	*24.9		*24.9	*14.3		*14.3							
	Dozer and stab down	lb	*40.7		*40.7	*24.9		20.5	*14.3		12.5							

Load Point Height

Load Radius Over Front

Load Radius Over Rear

Load Radius Over Side

Load at Maximum Reach

* Indicates that the load is limited by hydraulic capacity rather than tipping capacity. Lift capacity ratings are based on SAE standard JISO 10567. Rated loads do not exceed 87% of hydraulic lifting capacity or 75% of tipping capacity.

• Lifting values are without bucket or coupler installed.

Lift Capacities with VA boom – 5.44 m (17'10")

Metric Units/all weights are in metric tons

Stick
2.5 m (8'2")

	Undercarriage configuration		3.0 m			4.5 m			6.0 m			7.5 m						
6.0 m	Rear dozer up	t							*5.4		3.7							
	Rear dozer down	t								*5.4	4.2							
	Rear stab down	t								*5.4	5.0							
	2 sets stab down	t							*5.4		*5.4							
	Dozer and stab down	t							*5.4		*5.4							
4.5 m	Rear dozer up	t				*7.1		5.8	5.4		3.6	3.5		2.3				
	Rear dozer down	t					*7.1	6.6		*5.8	4.1		*5.1	2.6				
	Rear stab down	t					*7.1	*7.1		*5.8	5.0		*5.1	3.2				
	2 sets stab down	t				*7.1		*7.1	*5.8		*5.8	*5.1		4.9				
	Dozer and stab down	t				*7.1		*7.1	*5.8		*5.8	*5.1		4.1				
3.0 m	Rear dozer up	t	*11.3		10.4	8.2		5.5	5.3		3.6	3.5		2.3	*1.4		*1.4	9.29 m
	Rear dozer down	t		*11.3	*11.3		*8.8	6.3		*6.6	4.0		*5.4	2.6		*1.4	*1.4	
	Rear stab down	t		*11.3	*11.3		*8.8	7.6		*6.6	4.9		*5.4	3.2		*1.4	*1.4	
	2 sets stab down	t	*11.3		*11.3	*8.8		*8.8	*6.6		*6.6	*5.4		4.9	*1.4		*1.4	
	Dozer and stab down	t	*11.3		*11.3	*8.8		*8.8	*6.6		5.9	*5.4		4.1	*1.4		*1.4	
1.5 m	Rear dozer up	t	*12.7		10.1	8.0		5.4	5.2		3.5	3.5		2.2	*1.5		1.3	9.50 m
	Rear dozer down	t		*12.7	11.6		*10.2	6.2		*7.2	4.0		*5.6	2.5		*1.5	*1.5	
	Rear stab down	t		*12.7	*12.7		*10.2	7.4		*7.2	4.8		5.4	3.2		*1.5	*1.5	
	2 sets stab down	t	*12.7		*12.7	*10.2		*10.2	*7.2		6.9	*5.6		4.8	*1.5		*1.5	
	Dozer and stab down	t	*12.7		*12.7	*10.2		9.0	*7.2		5.8	*5.6		4.0	*1.5		*1.5	
Ground	Rear dozer up	t	*15.0		9.9	8.0		5.3	5.2		3.4	3.4		2.1	*1.6		1.3	9.41 m
	Rear dozer down	t		*15.0	11.6		*10.5	6.1		*7.5	3.9		*5.7	2.4		*1.6	*1.6	
	Rear stab down	t		*15.0	14.4		*10.5	7.5		*7.5	4.8		5.3	3.1		*1.6	*1.6	
	2 sets stab down	t	*15.0		*15.0	*10.5		*10.5	*7.5		6.9	*5.7		4.7	*1.6		*1.6	
	Dozer and stab down	t	*15.0		*15.0	*10.5		9.1	*7.5		5.9	*5.7		3.9	*1.6		*1.6	
-1.5 m	Rear dozer up	t	16.3		9.5	8.0		5.1	5.0		3.2	3.2		2.0	*1.7		1.4	9.03 m
	Rear dozer down	t		*17.4	11.2		*10.6	5.8		*7.6	3.7		*5.2	2.3		*1.7	1.7	
	Rear stab down	t		*17.4	14.6		*10.6	7.3		*7.6	4.5		5.2	2.9		*1.7	*1.7	
	2 sets stab down	t	*17.4		*17.4	*10.6		*10.6	*7.6		7.0	*5.2		4.6	*1.7		*1.7	
	Dozer and stab down	t	*17.4		*17.4	*10.6		9.3	*7.6		5.7	*5.2		3.7	*1.7		*1.7	
-3.0 m	Rear dozer up	t	16.4		9.5	8.0		5.0	4.8		3.0				*2.0		1.7	8.29 m
	Rear dozer down	t		*18.0	11.2		*11.1	5.8		*7.0	3.5					*2.0	2.0	
	Rear stab down	t		*18.0	14.6		*11.1	7.2		*7.0	4.3					*2.0	*2.0	
	2 sets stab down	t	*18.0		*18.0	*11.1		*11.1	*7.0		6.7				*2.0		*2.0	
	Dozer and stab down	t	*18.0		*18.0	*11.1		9.2	*7.0		5.5				*2.0		*2.0	
-4.5 m	Rear dozer up	t	*15.0		9.6													
	Rear dozer down	t		*15.0	11.3													
	Rear stab down	t		*15.0	14.7													
	2 sets stab down	t	*15.0		*15.0													
	Dozer and stab down	t	*15.0		*15.0													

Stick
2.9 m (9'6")

	Undercarriage configuration		3.0 m			4.5 m			6.0 m			7.5 m						
6.0 m	Rear dozer up	t							*5.0		3.7	*3.2		2.3				
	Rear dozer down	t								*5.0	4.2		*3.2	2.6				
	Rear stab down	t								*5.0	*5.0		*3.2	*3.2				
	2 sets stab down	t							*5.0		*5.0	*3.2		*3.2				
	Dozer and stab down	t							*5.0		*5.0	*3.2		*3.2				
4.5 m	Rear dozer up	t				*6.0		5.9	5.4		3.7	3.6		2.4				
	Rear dozer down	t					*6.0	*6.0		*5.5	4.1		*4.9	2.7				
	Rear stab down	t					*6.0	*6.0		*5.5	5.0		*4.9	3.3				
	2 sets stab down	t				*6.0		*6.0	*5.5		*5.5	*4.9		*4.9				
	Dozer and stab down	t				*6.0		*6.0	*5.5		*5.5	*4.9		4.1				
3.0 m	Rear dozer up	t	*11.3		10.5	8.2		5.6	5.3		3.6	3.6		2.4	*1.2		*1.2	9.69 m
	Rear dozer down	t		*11.3	*11.3		*8.3	6.3		*6.3	4.1		*5.2	2.7		*1.2	*1.2	
	Rear stab down	t		*11.3	*11.3		*8.3	7.6		*6.3	4.9		*5.2	3.3		*1.2	*1.2	
	2 sets stab down	t	*11.3		*11.3	*8.3		*8.3	*6.3		*6.3	*5.2		4.9	*1.2		*1.2	
	Dozer and stab down	t	*11.3		*11.3	*8.3		*8.3	*6.3		5.9	*5.2		4.1	*1.2		*1.2	
1.5 m	Rear dozer up	t	*12.7		10.1	8.0		5.4	5.2		3.5	3.6		2.3	*1.2		*1.2	9.89 m
	Rear dozer down	t		*12.7	11.6		*9.8	6.2		*7.0	4.0		*5.5	2.6		*1.2	*1.2	
	Rear stab down	t		*12.7	*12.7		*9.8	7.4		*7.0	4.8		*5.3	3.3		*1.2	*1.2	
	2 sets stab down	t	*12.7		*12.7	*9.8		*9.8	*7.0		6.9	*5.5		4.9	*1.2		*1.2	
	Dozer and stab down	t	*12.7		*12.7	*9.8		9.0	*7.0		5.8	*5.5		4.1	*1.2		*1.2	
Ground	Rear dozer up	t	*14.5		10.0	8.0		5.4	5.2		3.4	3.4		2.2	*1.3		1.2	9.81 m
	Rear dozer down	t		*14.5	11.6		*10.4	6.1		*7.4	3.9		*5.7	2.5		*1.3	*1.3	
	Rear stab down	t		*14.5	14.3		*10.4	7.4		*7.4	4.8		5.3	3.1		*1.3	*1.3	
	2 sets stab down	t	*14.5		*14.5	*10.4		*10.4	*7.4		6.8	*5.7		4.8	*1.3		*1.3	
	Dozer and stab down	t	*14.5		*14.5	*10.4		9.0	*7.4		5.8	*5.7		3.9	*1.3		*1.3	
-1.5 m	Rear dozer up	t	16.0		9.5	8.0		5.1	5.1		3.3	3.3		2.0	*1.4		1.3	9.44 m
	Rear dozer down	t		*17.0	11.2		*10.5	5.8		*7.5	3.7		*5.6	2.4		*1.4	*1.4	
	Rear stab down	t		*17.0	14.6		*10.5	7.3		*7.5	4.6		5.2	3.0		*1.4	*1.4	
	2 sets stab down	t	*17.0		*17.0	*10.5		*10.5	*7.5		7.0	*5.6		4.6	*1.4		*1.4	
	Dozer and stab down	t	*17.0		*17.0	*10.5		9.2	*7.5		5.8	*5.6		3.8	*1.4		*1.4	
-3.0 m	Rear dozer up	t	16.3		9.4	7.9		5.0	4.8		3.0				*1.7		1.5	8.75 m
	Rear dozer down	t		*17.7	11.1		*10.9	5.8		*7.5	3.5					*1.7	*1.7	
	Rear stab down	t		*17.7	14.5		*10.9	7.2		*7.5	4.4					*1.7	*1.7	
	2 sets stab down	t	*17.7		*17.7	*10.9		*10.9	*7.5		6.8				*1.7		*1.7	
	Dozer and stab down	t	*17.7		*17.7	*10.9		9.2	*7.5		5.5				*1.7		*1.7	
-4.5 m	Rear dozer up	t	16.6		9.7	7.7		4.8										
	Rear dozer down	t		*17.2	11.4		*9.2	5.6										
	Rear stab down	t		*17.2	14.7		*9.2	7.0										
	2 sets stab down	t	*17.2		*17.2	*9.2		*9.2										
	Dozer and stab down	t	*17.2		*17.2	*9.2		9.0										

Load Point Height

Load Radius Over Front

Load Radius Over Rear

Load Radius Over Side

Load at Maximum Reach

* Indicates that the load is limited by hydraulic capacity rather than tipping capacity. Lift capacity ratings are based on SAE standard JISO 10567. Rated loads do not exceed 87% of hydraulic lifting capacity or 75% of tipping capacity.

• Lifting values are without bucket or coupler installed.

Lift Capacities with VA boom – 5.44 m (17'10")

English Units/all weights are in lbs (multiply by 1,000)

Stick
2.5 m (8'2")

	Undercarriage configuration		10.0 ft			15.0 ft			20.0 ft			25.0 ft						
20.0 ft	Rear dozer up	lb							*11.9		8.1							
	Rear dozer down	lb								*11.9	9.2							
	Rear stab down	lb								*11.9	11.0							
	2 sets stab down	lb							*11.9		*11.9							
	Dozer and stab down	lb							*11.9		*11.9							
15.0 ft	Rear dozer up	lb				*15.6		12.7	11.9		7.9	7.7		5.0				
	Rear dozer down	lb					*15.6	14.5		*12.7	9.0		*11.2	5.7				
	Rear stab down	lb					*15.6	*15.6		*12.7	11.0		*11.2	7.0				
	2 sets stab down	lb				*15.6		*15.6	*12.7		*12.7	*11.2		10.8				
	Dozer and stab down	lb				*15.6		*15.6	*12.7		*12.7	*11.2		9.0				
10.0 ft	Rear dozer up	lb	*24.9		22.9	18.0		12.1	11.6		7.9	7.7		5.0	*3.0		*3.0	30'5"
	Rear dozer down	lb		*24.9	*24.9		*19.4	13.8		*14.5	8.8		*11.9	5.7		*3.0	*3.0	
	Rear stab down	lb		*24.9	*24.9		*19.4	16.7		*14.5	10.8		*11.9	7.0		*3.0	*3.0	
	2 sets stab down	lb	*24.9		*24.9	*19.4		*19.4	*14.5		14.5	*11.9		10.8	*3.0		*3.0	
	Dozer and stab down	lb	*24.9		*24.9	*19.4		*19.4	*14.5		13.0	*11.9		9.0	*3.0		*3.0	
5.0 ft	Rear dozer up	lb	*27.9		22.2	17.6		11.9	11.4		7.7	7.7		4.8	*3.3		2.8	31'2"
	Rear dozer down	lb		*27.9	25.5		*22.4	13.6		*15.8	8.8		*12.3	5.5		*3.3	*3.3	
	Rear stab down	lb		*27.9	*27.9		*22.4	16.3		*15.8	10.5		11.9	7.0		*3.3	*3.3	
	2 sets stab down	lb	*27.9		*27.9	*22.4		*22.4	*15.8		15.2	*12.3		10.5	*3.3		*3.3	
	Dozer and stab down	lb	*27.9		*27.9	*22.4		19.8	*15.8		12.7	*12.3		8.8	*3.3		*3.3	
Ground	Rear dozer up	lb	*33.0		21.8	17.6		11.6	11.4		7.4	7.4		4.6	*3.5		2.8	30'10"
	Rear dozer down	lb		*33.0	25.5		*23.1	13.4		*16.5	8.5		*12.5	5.2		*3.5	*3.5	
	Rear stab down	lb		*33.0	31.7		*23.1	16.5		*16.5	10.5		11.6	6.8		*3.5	*3.5	
	2 sets stab down	lb	*33.0		*33.0	*23.1		*23.1	*16.5		15.2	*12.5		10.3	*3.5		*3.5	
	Dozer and stab down	lb	*33.0		*33.0	*23.1		20.0	*16.5		13.0	*12.5		8.5	*3.5		*3.5	
-5.0 ft	Rear dozer up	lb	35.9		20.9	17.6		11.2	11.0		7.0	7.0		4.4	*3.7		3.0	29'7"
	Rear dozer down	lb		*38.3	24.6		*23.3	12.7		*16.7	8.1		*11.4	5.0		*3.7	3.7	
	Rear stab down	lb		*38.3	32.1		*23.3	16.0		*16.7	9.9		11.4	6.3		*3.7	*3.7	
	2 sets stab down	lb	*38.3		*38.3	*23.3		*23.3	*16.7		15.4	*11.4		10.1	*3.7		*3.7	
	Dozer and stab down	lb	*38.3		*38.3	*23.3		20.5	*16.7		12.5	*11.4		8.1	*3.7		*3.7	
-10.0 ft	Rear dozer up	lb	36.1		20.9	17.6		11.0	10.5		6.6				*4.4		3.7	27'2"
	Rear dozer down	lb		*39.6	24.6		*24.4	12.7		*15.4	7.7					*4.4	4.4	
	Rear stab down	lb		*39.6	32.1		*24.4	15.8		*15.4	9.4					*4.4	*4.4	
	2 sets stab down	lb	*39.6		*39.6	*24.4		*24.4	*15.4		14.7				*4.4		*4.4	
	Dozer and stab down	lb	*39.6		*39.6	*24.4		20.2	*15.4		12.1				*4.4		*4.4	
-15.0 ft	Rear dozer up	lb	*33.0		21.1													
	Rear dozer down	lb		*33.0	24.9													
	Rear stab down	lb		*33.0	32.4													
	2 sets stab down	lb	*33.0		*33.0													
	Dozer and stab down	lb	*33.0		*33.0													

Stick
2.9 m (9'6")

	Undercarriage configuration		10.0 ft			15.0 ft			20.0 ft			25.0 ft						
20.0 ft	Rear dozer up	lb							*11.0		8.1	*7.0		5.0				
	Rear dozer down	lb								*11.0	9.2		*7.0	5.7				
	Rear stab down	lb								*11.0	*11.0		*7.0	*7.0				
	2 sets stab down	lb							*11.0		*11.0	*7.0		*7.0				
	Dozer and stab down	lb							*11.0		*11.0	*7.0		*7.0				
15.0 ft	Rear dozer up	lb				*13.2		13.0	11.9		8.1	7.9		5.2				
	Rear dozer down	lb					*13.2	*13.2		*12.1	9.0		*10.8	5.9				
	Rear stab down	lb					*13.2	*13.2		*12.1	11.0		*10.8	7.2				
	2 sets stab down	lb				*13.2		*13.2	*12.1		*12.1	*10.8		*10.8				
	Dozer and stab down	lb				*13.2		*13.2	*12.1		*12.1	*10.8		9.0				
10.0 ft	Rear dozer up	lb	*24.9		23.1	18.0		12.3	11.6		7.9	7.9		5.2	*2.6		*2.6	31'9"
	Rear dozer down	lb		*24.9	*24.9		*18.2	13.8		*13.8	9.0		*11.4	5.9		*2.6	*2.6	
	Rear stab down	lb		*24.9	*24.9		*18.2	16.7		*13.8	10.8		*11.4	7.2		*2.6	*2.6	
	2 sets stab down	lb	*24.9		*24.9	*18.2		*18.2	*13.8		*13.8	*11.4		10.8	*2.6		*2.6	
	Dozer and stab down	lb	*24.9		*24.9	*18.2		*18.2	*13.8		13.0	*11.4		9.0	*2.6		*2.6	
5.0 ft	Rear dozer up	lb	*27.9		22.2	17.6		11.9	11.4		7.7	7.9		5.0	*2.6		*2.6	32'5"
	Rear dozer down	lb		*27.9	25.5		*21.6	13.6		*15.4	8.8		*12.1	5.7		*2.6	*2.6	
	Rear stab down	lb		*27.9	*27.9		*21.6	16.3		*15.4	10.5		*11.6	7.2		*2.6	*2.6	
	2 sets stab down	lb	*27.9		*27.9	*21.6		*21.6	*15.4		15.2	*12.1		10.8	*2.6		*2.6	
	Dozer and stab down	lb	*27.9		*27.9	*21.6		19.8	*15.4		12.7	*12.1		9.0	*2.6		*2.6	
Ground	Rear dozer up	lb	*31.9		22.0	17.6		11.9	11.4		5.2	7.4		4.8	*2.8		2.6	32'2"
	Rear dozer down	lb		*31.9	25.5		*22.9	13.4		*16.3	8.5		*12.5	5.5		*2.8	*2.8	
	Rear stab down	lb		*31.9	31.5		*22.9	16.3		*16.3	10.5		11.6	6.8		*2.8	*2.8	
	2 sets stab down	lb	*31.9		*31.9	*22.9		*22.9	*16.3		14.9	*12.5		10.5	*2.8		*2.8	
	Dozer and stab down	lb	*31.9		*31.9	*22.9		19.8	*16.3		12.7	*12.5		8.5	*2.8		*2.8	
-5.0 ft	Rear dozer up	lb	35.2		20.9	17.6		11.2	11.2		7.2	7.2		4.4	*3.0		2.8	30'11"
	Rear dozer down	lb		*37.4	24.6		*23.1	12.7		*16.5	8.1		*12.3	5.2		*3.0	*3.0	
	Rear stab down	lb		*37.4	32.1		*23.1	16.0		*16.5	10.1		11.4	6.6		*3.0	*3.0	
	2 sets stab down	lb	*37.4		*37.4	*23.1		*23.1	*16.5		15.4	*12.3		10.1	*3.0		*3.0	
	Dozer and stab down	lb	*37.4		*37.4	*23.1		20.2	*16.5		12.7	*12.3		8.3	*3.0		*3.0	
-10.0 ft	Rear dozer up	lb	35.9		20.7	17.4		11.0	10.5		6.6				*3.7		3.3	28'8"
	Rear dozer down	lb		*39.0	24.4		*24.0	12.7		*16.5	7.7					*3.7	*3.7	
	Rear stab down	lb		*39.0	31.9		*24.0	15.8		*16.5	9.7					*3.7	*3.7	
	2 sets stab down	lb	*39.0		*39.0	*24.0		*24.0	*16.5		14.9				*3.7		*3.7	
	Dozer and stab down	lb	*39.0		*39.0	*24.0		20.2	*16.5		12.1				*3.7		*3.7	
-15.0 ft	Rear dozer up	lb	36.5		21.3	16.9		10.5										
	Rear dozer down	lb		*37.9	25.1		*20.2	12.3										
	Rear stab down	lb		*37.9	32.4		*20.2	15.4										
	2 sets stab down	lb	*37.9		*37.9	*20.2		*20.2										
	Dozer and stab down	lb	*37.9		*37.9	*20.2		19.8										

Load Point Height

Load Radius Over Front

Load Radius Over Rear

Load Radius Over Side

Load at Maximum Reach

* Indicates that the load is limited by hydraulic capacity rather than tipping capacity. Lift capacity ratings are based on SAE standard JISO 10567. Rated loads do not exceed 87% of hydraulic lifting capacity or 75% of tipping capacity.

• Lifting values are without bucket or coupler installed.

Lift Capacities with one-piece boom – 5.65 m (18'6")

Metric Units/all weights are in metric tons

Stick
2.2 m (7'3")

	Undercarriage configuration		3.0 m			4.5 m			6.0 m			7.5 m						
6.0 m	Rear dozer up	t							5.6		3.8							
	Rear dozer down	t								*5.9	4.3							
	Rear stab down	t								*5.9	5.2							
	2 sets stab down	t							*5.9		*5.9							
	Dozer and stab down	t							*5.9		*5.9							
4.5 m	Rear dozer up	t							5.5		3.7	3.8		2.5				
	Rear dozer down	t								*6.4	4.2		*5.6	2.9				
	Rear stab down	t								*6.4	5.0		*5.6	3.5				
	2 sets stab down	t							*6.4		*6.4	*5.6		5.2				
	Dozer and stab down	t							*6.4		6.2	*5.6		4.3				
3.0 m	Rear dozer up	t				8.1		5.2	5.2		3.5	3.7		2.4	*2.5		1.9	8.79 m
	Rear dozer down	t					*9.6	6.0		*7.1	3.9		*5.9	2.8		*2.5	2.2	
	Rear stab down	t					*9.6	7.4		*7.1	4.8		5.6	3.4		*2.5	*2.5	
	2 sets stab down	t				*9.6		*9.6	*7.1		*7.1	*5.9		5.1	*2.5		*2.5	
	Dozer and stab down	t				*9.6		9.3	*7.1		5.9	*5.9		4.2	*2.5		*2.5	
1.5 m	Rear dozer up	t				7.6		4.8	5.0		3.2	3.6		2.3	*2.5		1.8	8.88 m
	Rear dozer down	t					*10.8	5.5		*7.7	3.7		*6.1	2.7		*2.5	2.1	
	Rear stab down	t					*10.8	6.9		*7.7	4.6		5.5	3.3		*2.5	*2.5	
	2 sets stab down	t				*10.8		*10.8	*7.7		6.9	*6.1		4.9	*2.5		*2.5	
	Dozer and stab down	t				*10.8		8.8	*7.7		5.7	*6.1		4.1	*2.5		*2.5	
Ground	Rear dozer up	t				7.4		4.6	4.8		3.1	3.5		2.3	*2.6		1.9	8.67 m
	Rear dozer down	t					*10.9	5.3		*7.9	3.6		*6.1	2.6		*2.6	2.1	
	Rear stab down	t					*10.9	6.7		7.7	4.4		5.4	3.2		*2.6	2.6	
	2 sets stab down	t				*10.9		10.7	*7.9		6.8	*6.1		4.9	*2.6		*2.6	
	Dozer and stab down	t				*10.9		8.5	*7.9		5.5	*6.1		4.0	*2.6		*2.6	
-1.5 m	Rear dozer up	t	*7.4		*7.4	7.3		4.6	4.8		3.1	3.5		2.3	*2.9		2.0	8.14 m
	Rear dozer down	t		*7.4	*7.4		*10.0	5.3		*7.5	3.5		*5.4	2.6		*2.9	2.3	
	Rear stab down	t		*7.4	*7.4		*10.0	6.7		*7.5	4.4		5.4	3.2		*2.9	2.9	
	2 sets stab down	t	*7.4		*7.4	*10.0		*10.0	*7.5		6.7	*5.4		4.8	*2.9		*2.9	
	Dozer and stab down	t	*7.4		*7.4	*10.0		8.5	*7.5		5.5	*5.4		4.0	*2.9		*2.9	
-3.0 m	Rear dozer up	t	*10.7		8.9	7.4		4.7	4.8		3.1				*3.4		2.5	7.22 m
	Rear dozer down	t		*10.7	10.5		*8.3	5.4		*6.1	3.6					*3.4	2.8	
	Rear stab down	t		*10.7	*10.7		*8.3	6.8		*6.1	4.4					*3.4	*3.4	
	2 sets stab down	t	*10.7		*10.7	*8.3		*8.3	*6.1		*6.1				*3.4		*3.4	
	Dozer and stab down	t	*10.7		*10.7	*8.3		*8.3	*6.1		5.6				*3.4		*3.4	

English Units/all weights are in lbs (multiply by 1,000)

Stick
2.2 m (7'3")

	Undercarriage configuration		10.0 ft			15.0 ft			20.0 ft			25.0 ft						
20.0 ft	Rear dozer up	lb							12.3		8.3							
	Rear dozer down	lb								*13.0	9.4							
	Rear stab down	lb								*13.0	11.4							
	2 sets stab down	lb							*13.0		*13.0							
	Dozer and stab down	lb							*13.0		*13.0							
15.0 ft	Rear dozer up	lb							12.1		8.1	8.3		5.5				
	Rear dozer down	lb								*14.1	9.2		*12.3	6.3				
	Rear stab down	lb								*14.1	11.0		*12.3	7.7				
	2 sets stab down	lb							*14.1		*14.1	*12.3		11.4				
	Dozer and stab down	lb							*14.1		13.6	*12.3		9.4				
10.0 ft	Rear dozer up	lb				17.8		11.5	11.4		7.7	8.1		5.2	*5.5		4.1	28'10"
	Rear dozer down	lb					*21.1	13.2		*15.6	8.5		*13.0	6.1		*5.5	4.8	
	Rear stab down	lb					*21.1	16.3		*15.6	10.5		12.3	7.4		*5.5	*5.5	
	2 sets stab down	lb				*21.1		*21.1	*15.6		*15.6	*13.0		11.2	*5.5		*5.5	
	Dozer and stab down	lb				*21.1		20.5	*15.6		13.0	*13.0		9.2	*5.5		*5.5	
5.0 ft	Rear dozer up	lb				16.7		10.5	11.0		7.0	7.9		5.0	*5.5		3.9	29'1"
	Rear dozer down	lb					*23.8	12.1		*16.9	8.1		*13.4	5.9		*5.5	4.6	
	Rear stab down	lb					*23.8	15.2		*16.9	10.1		12.1	7.2		*5.5	*5.5	
	2 sets stab down	lb				*23.8		*23.8	*16.9		15.2	*13.4		10.8	*5.5		*5.5	
	Dozer and stab down	lb				*23.8		19.4	*16.9		12.5	*13.4		9.0	*5.5		*5.5	
Ground	Rear dozer up	lb				16.3		10.1	10.5		6.8	7.7		5.0	*5.7		4.1	28'5"
	Rear dozer down	lb					*24.0	11.6		*17.4	7.9		*13.4	5.7		*5.7	4.6	
	Rear stab down	lb					*24.0	14.7		16.9	9.7		11.9	7.0		*5.7	5.7	
	2 sets stab down	lb				*24.0		23.5	*17.4		14.9	*13.4		10.8	*5.7		*5.7	
	Dozer and stab down	lb				*24.0		18.7	*17.4		12.1	*13.4		8.8	*5.7		*5.7	
-5.0 ft	Rear dozer up	lb	*16.3		*16.3	16.0		10.1	10.5		6.8	7.7		5.0	*6.3		4.4	26'8"
	Rear dozer down	lb		*16.3	*16.3		*22.0	11.6		*16.5	7.7		*11.9	5.7		*6.3	5.0	
	Rear stab down	lb		*16.3	*16.3		*22.0	14.7		*16.5	9.7		11.9	7.0		*6.3	6.3	
	2 sets stab down	lb	*16.3		*16.3	*22.0		*22.0	*16.5		14.7	*11.9		10.5	*6.3		*6.3	
	Dozer and stab down	lb	*16.3		*16.3	*22.0		18.7	*16.5		12.1	*11.9		8.8	*6.3		*6.3	
-10.0 ft	Rear dozer up	lb	*23.5		19.6	16.3		10.3	10.5		6.8				*7.4		5.5	26'11"
	Rear dozer down	lb		*23.5	23.1		*18.2	11.9		*13.4	7.9					*7.4	6.1	
	Rear stab down	lb		*23.5	*23.5		*18.2	14.9		*13.4	9.7					*7.4	*7.4	
	2 sets stab down	lb	*23.5		*23.5	*18.2		*18.2	*13.4		*13.4				*7.4		*7.4	
	Dozer and stab down	lb	*23.5		*23.5	*18.2		*18.2	*13.4		12.3				*7.4		*7.4	

Load Point Height

Load Radius Over Front

Load Radius Over Rear

Load Radius Over Side

Load at Maximum Reach

* Indicates that the load is limited by hydraulic capacity rather than tipping capacity. Lift capacity ratings are based on SAE standard JISO 10567. Rated loads do not exceed 87% of hydraulic lifting capacity or 75% of tipping capacity.

• Lifting values are without bucket or coupler installed.

Lift Capacities with one-piece boom – 5.65 m (18'6")

Metric Units/all weights are in metric tons

Stick
2.5 m (8'2")

	Undercarriage configuration		3.0 m			4.5 m			6.0 m			7.5 m						
4.5 m	Rear dozer up	t							5.2		3.4	3.5		2.2				
	Rear dozer down	t								*5.8	3.9		*5.1	2.6				
	Rear stab down	t								*5.8	4.8		*5.1	3.2				
	2 sets stab down	t							*5.8		*5.8	*5.1		4.9				
	Dozer and stab down	t							*5.8		*5.8	*5.1		4.0				
3.0 m	Rear dozer up	t				7.9		5.1	5.0		3.2	3.4		2.2	*1.5		1.4	9.46 m
	Rear dozer down	t					*8.9	5.8		*6.6	3.7		*5.4	2.5		*1.5	*1.5	
	Rear stab down	t					*8.9	7.2		*6.6	4.5		5.3	3.1		*1.5	*1.5	
	2 sets stab down	t				*8.9		*8.9	*6.6		*6.6	*5.4		4.8	*1.5		*1.5	
	Dozer and stab down	t				*8.9		*8.9	*6.6		5.7	*5.4		3.9	*1.5		*1.5	
1.5 m	Rear dozer up	t				7.3		4.5	4.7		3.0	3.3		2.0	*1.5		1.3	9.67 m
	Rear dozer down	t					*10.3	5.3		*7.2	3.4		*5.7	2.4		*1.5	*1.5	
	Rear stab down	t					*10.3	6.6		*7.2	4.3		5.2	3.0		*1.5	*1.5	
	2 sets stab down	t				*10.3		*10.3	*7.2		6.7	*5.7		4.7	*1.5		*1.5	
	Dozer and stab down	t				*10.3		8.5	*7.2		5.4	*5.7		3.8	*1.5		*1.5	
Ground	Rear dozer up	t				7.1		4.3	4.5		2.8	3.2		2.0	*1.6		1.3	9.58 m
	Rear dozer down	t					*10.5	5.0		*7.5	3.3		*5.7	2.3		*1.6	1.5	
	Rear stab down	t					*10.5	6.4		7.4	4.1		5.1	2.9		*1.6	*1.6	
	2 sets stab down	t				*10.5		10.4	*7.5		6.5	*5.7		4.6	*1.6		*1.6	
	Dozer and stab down	t				*10.5		8.3	*7.5		5.2	*5.7		3.7	*1.6		*1.6	
-1.5 m	Rear dozer up	t	*8.2		*8.2	7.0		4.2	4.5		2.7	3.2		1.9	*1.8		1.4	9.21 m
	Rear dozer down	t		*8.2	*8.2		*9.9	5.0		*7.2	3.2		*5.3	2.3		*1.8	1.6	
	Rear stab down	t		*8.2	*8.2		*9.9	6.3		*7.2	4.0		5.1	2.9		*1.8	*1.8	
	2 sets stab down	t	*8.2		*8.2	*9.9		*9.9	*7.2		6.4	*5.3		4.5	*1.8		*1.8	
	Dozer and stab down	t	*8.2		*8.2	*9.9		8.2	*7.2		5.2	*5.3		3.7	*1.8		*1.8	
-3.0 m	Rear dozer up	t	*11.3		8.4	7.1		4.3	4.5		2.8				*2.1		1.6	8.49 m
	Rear dozer down	t		*11.3	10.0		*8.4	5.1		*6.1	3.2					*2.1	1.9	
	Rear stab down	t		*11.3	*11.3		*8.4	6.4		*6.1	4.1					*2.1	*2.1	
	2 sets stab down	t	*11.3		*11.3	*8.4		*8.4	*6.1		*6.1				*2.1		*2.1	
	Dozer and stab down	t	*11.3		*11.3	*8.4		8.3	*6.1		5.2				*2.1		*2.1	
-4.5 m	Rear dozer up	t				*5.5		4.6										
	Rear dozer down	t					*5.5	5.3										
	Rear stab down	t					*5.5	*5.5										
	2 sets stab down	t				*5.5		*5.5										
	Dozer and stab down	t				*5.5		*5.5										

Stick
2.9 m (9'6")

	Undercarriage configuration		3.0 m			4.5 m			6.0 m			7.5 m			9.0 m						
6.0 m	Rear dozer up	t										3.6		2.3							
	Rear dozer down	t											*3.7	2.7							
	Rear stab down	t											*3.7	3.3							
	2 sets stab down	t										*3.7		*3.7							
	Dozer and stab down	t										*3.7		*3.7							
4.5 m	Rear dozer up	t							5.3		3.5	3.5		2.3							
	Rear dozer down	t								*5.5	4.0		*4.8	2.6							
	Rear stab down	t								*5.5	4.9		*4.8	3.2							
	2 sets stab down	t							*5.5		*5.5	*4.8		*4.8							
	Dozer and stab down	t							*5.5		*5.5	*4.8		4.1							
3.0 m	Rear dozer up	t				8.1		5.2	5.0		3.3	3.4		2.2				*1.2		*1.2	9.86 m
	Rear dozer down	t					*8.4	5.9		*6.3	3.7		*5.2	2.5					*1.2	*1.2	
	Rear stab down	t					*8.4	7.3		*6.3	4.6		*5.2	3.1					*1.2	*1.2	
	2 sets stab down	t				*8.4		*8.4	*6.3		*6.3	*5.2		4.8				*1.2		*1.2	
	Dozer and stab down	t				*8.4		*8.4	*6.3		5.8	*5.2		3.9				*1.2		*1.2	
1.5 m	Rear dozer up	t				7.4		4.6	4.7		3.0	3.3		2.0	*2.1		1.4	*1.3		1.2	10.05 m
	Rear dozer down	t					*10.0	5.4		*7.0	3.5		*5.5	2.4		*2.1	1.7		*1.3	*1.3	
	Rear stab down	t					*10.0	6.7		*7.0	4.3		5.2	3.0		*2.1	*2.1		*1.3	*1.3	
	2 sets stab down	t				*10.0		*10.0	*7.0		6.7	*5.5		4.7	*2.1		*2.1	*1.3		*1.3	
	Dozer and stab down	t				*10.0		8.6	*7.0		5.5	*5.5		3.8	*2.1		*2.1	*1.3		*1.3	
Ground	Rear dozer up	t				7.1		4.3	4.5		2.8	3.2		1.9				*1.4		1.2	9.97 m
	Rear dozer down	t					*10.5	5.0		*7.5	3.3		*5.7	2.3					*1.4	*1.4	
	Rear stab down	t					*10.5	6.4		7.4	4.1		5.1	2.9					*1.4	*1.4	
	2 sets stab down	t				*10.5		10.5	*7.5		6.5	*5.7		4.5				*1.4		*1.4	
	Dozer and stab down	t				*10.5		8.3	*7.5		5.2	*5.7		3.7				*1.4		*1.4	
-1.5 m	Rear dozer up	t	*7.8		*7.8	7.0		4.2	4.4		2.7	3.1		1.9				*1.5		1.3	9.61 m
	Rear dozer down	t		*7.8	*7.8		*10.1	4.9		*7.3	3.2		*5.5	2.2					*1.5	1.5	
	Rear stab down	t		*7.8	*7.8		*10.1	6.3		7.3	4.0		5.0	2.8					*1.5	*1.5	
	2 sets stab down	t	*7.8		*7.8	*10.1		*10.1	*7.3		6.4	*5.5		4.5				*1.5		*1.5	
	Dozer and stab down	t	*7.8		*7.8	*10.1		8.2	*7.3		5.1	*5.5		3.6				*1.5		*1.5	
-3.0 m	Rear dozer up	t	*12.4		8.3	7.0		4.3	4.4		2.7	3.2		1.9				*1.8		1.5	8.93 m
	Rear dozer down	t		*12.4	9.8		*8.9	5.0		*6.5	3.2		*4.0	2.3					*1.8	1.7	
	Rear stab down	t		*12.4	*12.4		*8.9	6.3		*6.5	4.0		*4.0	2.9					*1.8	*1.8	
	2 sets stab down	t	*12.4		*12.4	*8.9		*8.9	*6.5		6.4	*4.0		*4.0				*1.8		*1.8	
	Dozer and stab down	t	*12.4		*12.4	*8.9		8.2	*6.5		5.2	*4.0		3.7				*1.8		*1.8	
-4.5 m	Rear dozer up	t	*8.7		8.6	*6.5		4.4	*4.2		2.9										
	Rear dozer down	t		*8.7	*8.7		*6.5	5.2		*4.2	3.3										
	Rear stab down	t		*8.7	*8.7		*6.5	*6.5		*4.2	4.2										
	2 sets stab down	t	*8.7		*8.7	*6.5		*6.5	*4.2		*4.2										
	Dozer and stab down	t	*8.7		*8.7	*6.5		*6.5	*4.2		*4.2										

Load Point Height

Load Radius Over Front

Load Radius Over Rear

Load Radius Over Side

Load at Maximum Reach

* Indicates that the load is limited by hydraulic capacity rather than tipping capacity. Lift capacity ratings are based on SAE standard JISO 10567. Rated loads do not exceed 87% of hydraulic lifting capacity or 75% of tipping capacity.

• Lifting values are without bucket or coupler installed.

Lift Capacities with one-piece boom – 5.65 m (18'6")

English Units/all weights are in lbs (multiply by 1,000)

Stick
2.5 m (8'2")

	Undercarriage configuration		10.0 ft			15.0 ft			20.0 ft			25.0 ft						
15.0 ft	Rear dozer up	lb							11.4		7.4	7.7		4.8				
	Rear dozer down	lb								*12.7	8.5		*11.2	5.7				
	Rear stab down	lb								*12.7	10.5		*11.2	7.0				
	2 sets stab down	lb							*12.7		*12.7	*11.2		10.8				
	Dozer and stab down	lb							*12.7		*12.7	*11.2		8.8				
10.0 ft	Rear dozer up	lb				17.4		11.2	11.0		7.0	7.4		4.8	*3.3		3.0	31'0"
	Rear dozer down	lb					*19.6	12.7		*14.5	8.1		*11.9	5.5		*3.3	*3.3	
	Rear stab down	lb					*19.6	15.8		*14.5	9.9		11.6	6.8		*3.3	*3.3	
	2 sets stab down	lb				*19.6		*19.6	*14.5		*14.5	*11.9		10.5	*3.3		*3.3	
	Dozer and stab down	lb				*19.6		*19.6	*14.5		12.5	*11.9		8.5	*3.3		*3.3	
5.0 ft	Rear dozer up	lb				16.0		9.9	10.3		6.6	7.2		4.4	*3.3		2.8	31'8"
	Rear dozer down	lb					*22.7	11.6		*15.8	7.4		*12.5	5.2		*3.3	*3.3	
	Rear stab down	lb					*22.7	14.5		*15.8	9.4		11.4	6.6		*3.3	*3.3	
	2 sets stab down	lb				*22.7		*22.7	*15.8		14.7	*12.5		10.3	*3.3		*3.3	
	Dozer and stab down	lb				*22.7		18.7	*15.8		11.9	*12.5		8.3	*3.3		*3.3	
Ground	Rear dozer up	lb				15.6		9.4	9.9		6.1	7.0		4.4	*3.5		2.8	31'5"
	Rear dozer down	lb					*23.1	11.0		*16.5	7.2		*12.5	5.0		*3.5	3.3	
	Rear stab down	lb					*23.1	14.1		16.3	9.0		11.2	6.3		*3.5	*3.5	
	2 sets stab down	lb				*23.1		22.9	*16.5		14.3	*12.5		10.1	*3.5		*3.5	
	Dozer and stab down	lb				*23.1		18.2	*16.5		11.4	*12.5		8.1	*3.5		*3.5	
-5.0 ft	Rear dozer up	lb	*18.0		*18.0	15.4		9.2	9.9		5.9	7.0		4.1	*3.9		3.0	30'2"
	Rear dozer down	lb		*18.0	*18.0		*21.8	11.0		*15.8	7.0		*11.6	5.0		*3.9	3.5	
	Rear stab down	lb		*18.0	*18.0		*21.8	13.8		*15.8	8.8		11.2	6.3		*3.9	*3.9	
	2 sets stab down	lb	*18.0		*18.0	*21.8		*21.8	*15.8		14.1	*11.6		9.9	*3.9		*3.9	
	Dozer and stab down	lb	*18.0		*18.0	*21.8		18.0	*15.8		11.4	*11.6		8.1	*3.9		*3.9	
-10.0 ft	Rear dozer up	lb	*24.9		18.5	15.6		9.4	9.9		6.1				*4.6		3.5	27'10"
	Rear dozer down	lb		*24.9	22.0		*18.5	11.2		*13.4	7.0					*4.6	4.1	
	Rear stab down	lb		*24.9	*24.9		*18.5	14.1		*13.4	9.0					*4.6	*4.6	
	2 sets stab down	lb	*24.9		*24.9	*18.5		*18.5	*13.4		*13.4				*4.6		*4.6	
	Dozer and stab down	lb	*24.9		*24.9	*18.5		18.2	*13.4		11.4				*4.6		*4.6	
-15.0 ft	Rear dozer up	lb				*12.1		10.1										
	Rear dozer down	lb					*12.1	11.6										
	Rear stab down	lb					*12.1	*12.1										
	2 sets stab down	lb				*12.1		*12.1										
	Dozer and stab down	lb				*12.1		*12.1										

Stick
2.9 m (9'6")

	Undercarriage configuration		10.0 ft			15.0 ft			20.0 ft			25.0 ft			30.0 ft						
20.0 ft	Rear dozer up	lb										7.9		5.0							
	Rear dozer down	lb											*8.1	5.9							
	Rear stab down	lb											*8.1	7.2							
	2 sets stab down	lb										*8.1		*8.1							
	Dozer and stab down	lb										*8.1		*8.1							
15.0 ft	Rear dozer up	lb							11.6		7.7	7.7		5.0							
	Rear dozer down	lb								*12.1	8.8		*10.5	5.7							
	Rear stab down	lb								*12.1	10.8		*10.5	7.0							
	2 sets stab down	lb							*12.1		*12.1	*10.5		*10.5							
	Dozer and stab down	lb							*12.1		*12.1	*10.5		9.0							
10.0 ft	Rear dozer up	lb				17.8		11.4	11.0		7.2	7.4		4.8				*2.6		*2.6	32'4"
	Rear dozer down	lb					*18.5	13.0		*13.8	8.1		*11.4	5.5					*2.6	*2.6	
	Rear stab down	lb					*18.5	16.0		*13.8	10.1		*11.4	6.8					*2.6	*2.6	
	2 sets stab down	lb				*18.5		*18.5	*13.8		*13.8	*11.4		10.5				*2.6		*2.6	
	Dozer and stab down	lb				*18.5		*18.5	*13.8		12.7	*11.4		8.5				*2.6		*2.6	
5.0 ft	Rear dozer up	lb				16.3		10.1	10.3		6.6	7.2		4.4	*4.6		3.0	*2.8		2.6	32'11"
	Rear dozer down	lb					*22.0	11.9		*15.4	7.7		*12.1	5.2		*4.6	3.7		*2.8	*2.8	
	Rear stab down	lb					*22.0	14.7		*15.4	9.4		11.4	6.6		*4.6	*4.6		*2.8	*2.8	
	2 sets stab down	lb				*22.0		*22.0	*15.4		14.7	*12.1		10.3	*4.6		*4.6	*2.8		*2.8	
	Dozer and stab down	lb				*22.0		18.9	*15.4		12.1	*12.1		8.3	*4.6		*4.6	*2.8		*2.8	
Ground	Rear dozer up	lb				15.6		9.4	9.9		6.1	7.0		4.1				*3.0		2.6	32'8"
	Rear dozer down	lb					*22.0	11.0		*16.5	7.2		*12.5	5.0					*3.0	*3.0	
	Rear stab down	lb					*22.0	14.1		16.3	9.0		11.2	6.3					*3.0	*3.0	
	2 sets stab down	lb				*22.0		23.1	*16.5		14.3	*12.5		9.9				*3.0		*3.0	
	Dozer and stab down	lb				*22.0		18.2	*16.5		11.4	*12.5		8.1				*3.0		*3.0	
-5.0 ft	Rear dozer up	lb	*17.1		*17.1	15.4		9.2	9.7		5.9	6.8		4.1				*3.3		2.8	31'6"
	Rear dozer down	lb		*17.1	*17.1		*22.0	10.8		*16.0	7.0		*12.1	4.8					*3.3	3.3	
	Rear stab down	lb		*17.1	*17.1		*22.0	13.8		16.0	8.8		11.0	6.1					*3.3	*3.3	
	2 sets stab down	lb	*17.1		*17.1	*22.0		*22.0	*16.0		14.1	*12.1		9.9				*3.3		*3.3	
	Dozer and stab down	lb	*17.1		*17.1	*22.0		18.0	*16.0		11.2	*12.1		7.9				*3.3		*3.3	
-10.0 ft	Rear dozer up	lb	*27.3		18.2	15.4		9.4	9.7		5.9	7.0		4.1				*3.9		3.3	29'3"
	Rear dozer down	lb		*27.3	21.6		*19.6	11.0		*14.3	7.0		*8.8	5.0					*3.9	3.7	
	Rear stab down	lb		*27.3	*27.3		*19.6	13.8		*14.3	8.8		*8.8	6.3					*3.9	*3.9	
	2 sets stab down	lb	*27.3		*27.3	*19.6		*19.6	*14.3		14.1	*8.8		*8.8				*3.9		*3.9	
	Dozer and stab down	lb	*27.3		*27.3	*19.6		18.0	*14.3		11.4	*8.8		8.1				*3.9		*3.9	
-15.0 ft	Rear dozer up	lb	*19.1		18.9	*14.3		9.7	*9.2		6.3										
	Rear dozer down	lb		*19.1	*19.1		*14.3	11.4		*9.2	7.2										
	Rear stab down	lb		*19.1	*19.1		*14.3	*14.3		*9.2	9.2										
	2 sets stab down	lb	*19.1		*19.1	*14.3		*14.3	*9.2		*9.2										
	Dozer and stab down	lb	*19.1		*19.1	*14.3		*14.3	*9.2		*9.2										

Load Point Height

Load Radius Over Front

Load Radius Over Rear

Load Radius Over Side

Load at Maximum Reach

* Indicates that the load is limited by hydraulic capacity rather than tipping capacity. Lift capacity ratings are based on SAE standard JISO 10567. Rated loads do not exceed 87% of hydraulic lifting capacity or 75% of tipping capacity.

• Lifting values are without bucket or coupler installed.

Standard Equipment

Standard equipment may vary. Consult your Caterpillar dealer for details.

ELECTRICAL
- Alternator, 55amp
- Back-up alarm
- Boom working light
- Heavy duty maintenance free batteries
- Horn
- Main shut-off switch
- Roading lights

ENGINE
- Automatic engine speed control
- Automatic starting aid
- Cat 3056E DIT ATAAC U.S. EPA Tier 2 engine, turbocharged with air-to-air aftercooler
- Muffler

HYDRAULICS
- Cat XT-6™ ES hoses
- Load-sensing plus hydraulic system
- Manual work modes (economy, power, travel)
- Oil cooler
- Separate swing pump
- Stick regeneration circuit

LANGUAGE DISPLAY MONITOR
- Clock with 10 day backup battery
- Filter/fluid change information
- Gauges for fuel level, engine coolant temperature and hydraulic oil temperature
- Headlights indicator
- Indicator for engine dial setting
- Pre-start level check for hydraulic oil, engine oil coolant
- Turn signal indicator
- Warning messages
- Working hour information

OPERATOR STATION
- Air conditioner with automatic climate control
- Ash tray with cigarette lighter
- Bolt-on FOGS capability
- Bottom mounted parallel wiper and washer
- Coat hook
- Drink holder
- Floor mat, washable
- Fully adjustable suspension
- Heater and defroster
- Joysticks, adjustable
- Left side console, tiltable
- Light, interior
- Literature holder
- Low fuel indicator light
- Openable two-piece front windshield
- Parallel mounted top and bottom wiper and washer
- Parking brake
- Polycarbonate skylight
- Positive filtered ventilation
- Power supply, 12V-7A
- Radio, AM/FM stereo (24V)
- Retractable seat belt
- Steering column, tiltable
- Storage area suitable for a lunch box
- Sunscreen

UNDERCARRIAGE
- Heavy-duty axles with advanced travel motor with adjustable braking force
- Oscillating front axle with remote greasing
- Pin-on design preparation for dozer blade and outriggers
- Tool box in undercarriage
- Tires, 11.00-20 16PR
- Two-piece drive shaft
- Upper carriage storage box

OTHER EQUIPMENT
- Automatic swing brake
- Door locks and caps locks with Caterpillar one-key security system
- Lockable tool box in upper frame
- Mirrors, frame and cab
- Product Link ready

Optional Equipment

Optional equipment may vary. Consult your Caterpillar dealer for details.

BOOMS AND STICKS
- One-piece boom, 5.65 m (18 ft 6 in)
- Variable adjustable boom (two piece), 5.44 m (17 ft 10 in)
- 2.2 m (7 ft 3 in) stick
- 2.5 m (8 ft 2 in) stick
- 2.9 m (9 ft 6 in) stick

ELECTRICAL
- Refueling pump
- Rotating beacon on cab
- Working lights, cab mounted (front and rear)

HYDRAULICS
- Hammer valve
- Hydraulic lines for quick coupler-boom and stick
- Lowering control devices for boom and stick
- Multi-function valve, provides up to 5 programmed tools and tool selection from the cab (including hammer function)
- Proportional medium pressure function
- Synthetic ester based biodegradable hydraulic oil

OPERATOR STATION
- Comfort seat with seat heating and air suspension
- Falling objects guard
- Fixed cab riser 1200 mm (4 ft)
- Fixed one-piece front windshield
- Headrest
- Travel speed lock
- Vandalism guard
- Visor, rain protection, polycarbonate

UNDERCARRIAGE
- Dozer blade, front and/or rear mounted, with remote greasing
- Optional tires
  - 11.00-20 16PR dual tires
  - 10.00-20 solid dual tires
  - 18-R 19.5 XF single tires
  - Spacer rings for dual tires
- Outriggers, front and/or rear mounted
- Second tool box for undercarriage

OTHER EQUIPMENT
- Adjustable hydraulic sensitivity
- Cat Machine Security System
- Counterweight 4400 kg (9,700 lb)
- Custom paint
- Joystick steering

Notes

Notes

Notes

M322C Wheel Excavator

For more complete information on Cat products, dealer services, and industry solutions, visit us on the web at **www.cat.com**

Materials and specifications are subject to change without notice. Featured machines in photos may include additional equipment. See your Caterpillar dealer for available options.

AEHQ5533-01 (4-05)

Replaces AEHQ5533

CATERPILLAR®